Public Disclosure Authorized

Public Disclosure Authorized

Document of

The World Bank

FOR OFFICIAL USE ONLY

Report No: PAD2304

INTERNATIONAL DEVELOPMENT ASSOCIATION

PROJECT APPRAISAL DOCUMENT

ON A

PROPOSED CREDIT

IN THE AMOUNT OF EURO 30.1 MILLION
(US$35 MILLION EQUIVALENT)

TO THE

REPUBLIC OF TOGO

FOR THE

TOGO ENERGY SECTOR SUPPORT AND INVESTMENT PROJECT

NOVEMBER 29, 2017

Energy and Extractives Global Practice
Africa Region

This document has a restricted distribution and may be used by recipients only in the performance of their official duties. Its contents may not otherwise be disclosed without World Bank authorization.

CURRENCY EQUIVALENTS

(Exchange Rate Effective October 31, 2017)

Currency Unit =	FCFA
	FCFA 563.63
US$1 =	Euro 0.86
	SDR 0.713

FISCAL YEAR
January 1 - December 31

ABBREVIATIONS AND ACRONYMS

AFD	*Agence Française de Développement* (French Development Agency)
ANGE	*Agence Nationale De Gestion de l'Environnement* (National Agency for Environmental Management)
ARSE	*Autorité de Réglementationl du Secteur d'Electricité* (National Authority for the Regulation of the Electricity Sector)
CEB	*Communauté Electrique du Bénin* (Benin/Togo Generation and Transmission Power Utility)
CEET	*Compagnie Energie Electrique du Togo* (Public Distribution Utility)
CIE	*Compagnie Ivoirienne d'Electricité* (Electricity Company of Ivory Coast)
CPF	Country Partnership Framework
DA	Designated Account
DPO	Development Policy Operation
DTS	Decentralized Technical Services
ECF	Extended Credit Facility
EIRR	Economic Internal Rate of Return
ESE	Environment and Social Experts
ESIA	Environmental and Social Impact Assessment
ESMF	Environmental and Social Management Framework
ESMP	Environmental and Social Management Plan
EU	European Union
FIRR	Financial Internal Rate of Return
FM	Financial Management
FMIS	Financial Management Information System
FMS	Financial Management Specialist
FY	Fiscal Year
GDP	Gross Domestic Product
GHG	Greenhouse Gas
GIZ	*Deutsche Gesellschaft für Internationale Zusammenarbeit* (German Corporation for International Cooperation)
GoB	Government of Benin
GoT	Government of Togo

GRM	Grievance Redress Mechanism
GRS	Grievance Redress Service
GPA	Global Political Accord
HDI	Human Development Index
HFO	Heavy Fuel Oil
IFC	International Finance Corporation
IFR	Interim Financial Report
IMF	International Monetary Fund
IPF	Investment Project Financing
IPP	Independent Power Producer
kV	Kilovolt
kVA	Kilovolt Ampere
kWh	Kilowatt Hour
LV	Low Voltage
M&E	Monitoring and Evaluation
MIP	Management Improvement Plan
MME	*Ministère des Mines et de l'Energie* (Ministry of Mines and Energy)
MV	Medium Voltage
MVA	Mega Volt-Amp
MVAr	Mega Volt Amp (reactive power)
MW	Mega Watt
NGO	Non-governmental Organization
NPF	New Procurement Framework
NPV	Net Present Value
OP/BP	Operational Policy/Bank Procedure
PDO	Project Development Objective
PEFA	Public Expenditure and Financial Accountability
PEMFAR	Public Expenditure Management and Financial Accountability Review
PFM	Public Financial Management
PIM	Project Implementation Manual
PIMA	Poverty and Inequality Measurement and Analysis
PIU	Project Implementation Unit
PPA	Power Purchase Agreement
PPIAF	Public Private Infrastructure Advisory Facility
PPSD	Project Procurement Strategy for Development
PSC	Project Steering Committee
RAP	Resettlement Action Plan
RPF	Resettlement Policy Framework
SCADA	Systems Control and Data Acquisition
SCD	Systematic Country Diagnostic
SDR	Special Drawing Right
SG&A	Selling, General and Administrative expenses
SOE	State Owned Enterprise
SSA	Sub Saharan Africa
TCN	Transmission Company of Nigeria
TF	Trust Fund
ToR	Terms of Reference
UNDP	United Nations Development Programme

US$	United Stated Dollar
USc$	United Stated cents
VRA	Volta River Authority (Ghana)
WAPP	West African Power Pool
WB	World Bank
WTP	Willingness to Pay

Regional Vice President:	Makhtar Diop
Country Director:	Pierre Laporte
Senior Global Practice Director:	Riccardo Puliti
Practice Manager:	Charles Joseph Cormier
Task Team Leader(s):	Franklin Koffi S.W. Gbedey (ADM) Manuel Jose Millan Sanchez

REPUBLIC OF TOGO
Togo Energy Sector Support and Investment Project

TABLE OF CONTENTS

I. STRATEGIC CONTEXT 8
A. Country Context 8
B. Sectoral and Institutional Context 9
C. Higher Level Objectives to which the Project Contributes 13
II. PROJECT DEVELOPMENT OBJECTIVES 14
A. PDO 14
B. Project Beneficiaries 14
C. PDO-Level Results Indicators 14
III. PROJECT DESCRIPTION 15
A. Project Components 15
B. Project Cost and Financing 18
C. Lessons Learned and Reflected in the Project Design 18
IV. IMPLEMENTATION 20
A. Institutional and Implementation Arrangements 20
B. Results Monitoring and Evaluation 21
C. Sustainability 21
D. Role of Partners 22
V. KEY RISKS 22
A. Overall Risk Rating and Explanation of Key Risks 22
VI. APPRAISAL SUMMARY 24
A. Economic and Financial Analysis 24
B. Rationale for public sector provision/financing 27
C. Value added of Bank's support 27
D. Technical 27
E. Financial Management 28
F. Procurement 28
G. Social (including Safeguards) 29

H. Citizen engagement 30
I. Environment (including Safeguards) 30
J. Gender 31
K. Climate and disaster risks 32
L. World Bank Grievance Redress 32
VII. RESULTS FRAMEWORK AND MONITORING 33
ANNEX 1: DETAILED PROJECT DESCRIPTION 41
ANNEX 2: IMPLEMENTATION ARRANGEMENTS 48
ANNEX 3: IMPLEMENTATION SUPPORT PLAN 65
ANNEX 4: ECONOMIC AND FINANCIAL ANALYSIS 68

BASIC INFORMATION

Is this a regionally tagged project?	Country(ies)	Financing Instrument
No		Investment Project Financing

[ ] Situations of Urgent Need of Assistance or Capacity Constraints

[ ] Financial Intermediaries

[ ] Series of Projects

Approval Date	Closing Date	Environmental Assessment Category
20-Dec-2017	30-Nov-2022	B - Partial Assessment
Bank/IFC Collaboration		
No		

Proposed Development Objective(s)

The objective of the project is to improve the operational performance of the power sector and increase access to electricity in the capital city, Lomé.

Components

Component Name	Cost (US$, millions)
Power Distribution Improvement and Expansion	27.00
Power Sector Reform	6.60
Project Management and Capacity Building	2.40

Organizations

Borrower :	Republic of Togo
Implementing Agency :	MInistère de l'Energie et des Mines CEET

PROJECT FINANCING DATA (US$, Millions)

[✓] Counterpart Funding	[ ] IBRD	[✓] IDA Credit	[ ] IDA Grant	[ ] Trust Funds	[ ] Parallel Financing

Total Project Cost:	Total Financing:	Financing Gap:
36.00	36.00	0.00
	Of Which Bank Financing (IBRD/IDA): 35.00	

Financing (in US$, millions)

Financing Source	Amount
Borrower	1.00
IDA-61680	35.00
Total	**36.00**

Expected Disbursements (in US$, millions)

Fiscal Year	2018	2019	2020	2021	2022	2023
Annual	0.60	2.79	4.40	8.36	13.08	5.77
Cumulative	0.60	3.40	7.80	16.16	29.23	35.00

INSTITUTIONAL DATA

Practice Area (Lead)

Energy & Extractives

Contributing Practice Areas

Climate Change and Disaster Screening

This operation has been screened for short and long-term climate change and disaster risks

Gender Tag

Does the project plan to undertake any of the following?

a. Analysis to identify Project-relevant gaps between males and females, especially in light of country gaps identified through SCD and CPF

Yes

b. Specific action(s) to address the gender gaps identified in (a) and/or to improve women or men's empowerment

Yes

c. Include Indicators in results framework to monitor outcomes from actions identified in (b)

Yes

SYSTEMATIC OPERATIONS RISK-RATING TOOL (SORT)

Risk Category	Rating
1. Political and Governance	High
2. Macroeconomic	High
3. Sector Strategies and Policies	Substantial
4. Technical Design of Project or Program	Moderate
5. Institutional Capacity for Implementation and Sustainability	Substantial
6. Fiduciary	Substantial
7. Environment and Social	Moderate
8. Stakeholders	Moderate
9. Other	
10. Overall	Substantial

COMPLIANCE

Policy

Does the project depart from the CPF in content or in other significant respects?

[ ] Yes [✓] No

Does the project require any waivers of Bank policies?

[ ] Yes [✓] No

Safeguard Policies Triggered by the Project	Yes	No
Environmental Assessment OP/BP 4.01	✓	
Natural Habitats OP/BP 4.04		✓
Forests OP/BP 4.36		✓
Pest Management OP 4.09		✓
Physical Cultural Resources OP/BP 4.11	✓	
Indigenous Peoples OP/BP 4.10		✓
Involuntary Resettlement OP/BP 4.12	✓	
Safety of Dams OP/BP 4.37		✓
Projects on International Waterways OP/BP 7.50		✓
Projects in Disputed Areas OP/BP 7.60		✓

Legal Covenants

Conditions

Type	Description
Effectiveness	The Subsidiary Agreement has been executed on behalf of the Recipient and the Project Implementing Entity
Effectiveness	The Project Implementing Entity has established the CEET Project Unit and appointed all key staff as referred to in Section I.A.1 (b) of the Schedule to the Project Agreement

Type	Description
Effectiveness	The Project Implementing Entity has adopted the Project Implementation Manual, satisfactory to the Association.

PROJECT TEAM

Bank Staff

Name	Role	Specialization	Unit
Franklin Koffi S.W. Gbedey	Team Leader(ADM Responsible)	Power Engineering	GEE07
Manuel Jose Millan Sanchez	Team Leader	Power Engineering	GEE08
Kouami Hounsinou Messan	Procurement Specialist(ADM Responsible)	Procurement	GGO07
Mathias Gogohounga	Procurement Specialist	Procurement	GGO07
Angelo Donou	Financial Management Specialist	Financial Management	GGO26
Abdoul Ganyi Bachabi Alidou	Environmental Safeguards Specialist	Environmental	GEN07
Abdoul Wahabi Seini	Social Safeguards Specialist	Social	GSU01
Ali Ouattara	Team Member	Financial Analysis	GEE07
Amadou Mamadou Watt	Team Member	Financial Analysis	GEE07
Esinam Hlomador-Lawson	Team Member	Project Assistance	AFMTG
Issa Thiam	Team Member	Finance	WFALA
Juliana Chinyeaka Victor	Team Member	Sr Operations Officer	GEE08
Natalie Tchoumba Bitnga	Team Member	Program Assistance	GEE07

Extended Team

Name	Title	Organization	Location
Lucia Fort	Consultant		
Sonja Brajovic-Bratanovic	Bank Due Diligence Consultant		

I. STRATEGIC CONTEXT

A. Country Context

1. **The Republic of Togo is a small and ethnically-diverse country in West Africa with an economy dominated by the tertiary sector, which accounted for 50 percent of the gross domestic product (GDP) in 2016**. Although Togo's population is just over seven million people, and the country covers a relatively small area of 57,000 square kilometers with a width of about 100 kilometers, Togo is comprised of over 30 ethnic groups and numerous local languages. The country's geography is diverse, its natural assets include land resources and rainfall patterns that are generally favorable to agriculture, and it has significant phosphate and other mineral resources as well as a natural deep-water port of nearly 17 meters that is unique in the sub-region.

2. **Despite the economic achievements of the first decades after independence, Togo remains a low income, fragile state**. After independence, Togo was able to achieve economic progress by building an effective public administration and pursuing open, market-oriented economic policies. It established sound governance of the banking sector[1], successfully exploited its phosphate reserves, and became a sub-regional hub for logistics, trade, and banking. At its peak in 1980, Togo's per-capita GDP had risen from US$349 in 1960 to US$683 in 1980, above many developing economies at that time. However, despite an average annual GDP growth over the past decade of four percent, growth has been sporadic. Togo's real per-capita GDP today remains lower than its 1980 peak and stands at US$558 in 2016, compared with US$630 in 2014, in large part due to recurrent political crises since 1991 which exacerbated the Government's difficulties in delivering public investments and services

3. **Togo's poverty rate has not improved much over the last decade.** Togo's poverty rate has declined from 61.7 percent in 2006 to 55.1 percent in 2015, but extreme poverty remains very high at 49.2 percent in 2015. Togo's ranking in the United Nations Development Program's Human Development Index fell from 95th out of 124 countries in 1980 (bottom 23 percent) to 166th out of 188 countries (bottom 10 percent) in 2015. With regards to gender, the country ranked 134th out of 159 countries in the Gender Development Index (GDI) with a score of 0.841 in 2015, which is lower than neighboring countries (0.858 for Benin and 0.899 for Ghana) revealing that important gender inequalities still persist in the country in health, education and command over economic resources. [2]

4. **Political reforms initiated in 2006 have stabilized the country, but unresolved political issues still present a risk for Togo's economic development.** In 1991, Togo entered a prolonged period of political tension and key development partners curtailed or suspended their programs over concerns about governance, human rights, and democracy. From 1992 to 2002, official development assistance fell, thus exacerbating the Government of Togo's (GoT) difficulties in delivering public investments and services. In 2002, Togo fell into debt service arrears with the World Bank, which joined other donors in suspending financing. The further decline in donor support aggravated unsustainable public debt levels, which grew to almost 115 percent of

[1] World Bank. 1996. Togo: Overcoming the Crisis, Overcoming Poverty: A World Bank Poverty Assessment. (June 25). Report No. 13526-TO.
World Bank 2013. Baseline Informal Firm Survey (BIFS).
[2] Human Development Report 2016. United Nations Development Programme.

GDP in 2005. With the sudden passing of President Eyadéma in February 2005, presidential elections were organized in April 2005 and, Faure Gnassingbé was elected. A national dialogue involving various political parties was organized and resulted in the Global Political Accord (GPA) between the Government and the opposition in August 2006. With the 2006 GPA and legislative elections in 2007, development partners reengaged in Togo and the country embarked on a new period of recovery. However, the delayed implementation of some 2006 GPA reforms remains a point of contention. Combined with the GoT's difficulties in advancing reforms to broaden and accelerate economic opportunities, Togo remains vulnerable to future episodes of conflict. In 2016, proposed bills for constitutional reforms (including limiting presidential terms to two) were rejected. The next legislative elections are due in 2018 and presidential elections in 2020.

5. **Demographic and economic pressures may create social instability**. The annual population growth is high at 2.7 percent, 60 percent of the population is less than 25 years old, and the urbanization rate is around 4 percent per year. The country faces challenges in employing its expanding working-age population, especially women and youth, which face endemic unemployment and underemployment. Keeping girls in secondary school remains a challenge, women therefore have less education and are unable to fully participate in income-generating activities. In the public sector, the proportion of women employed full-time is lower than that of men, which is the case as well for the private sector. Recently, Government has also faced difficulties meeting payroll obligations, and public employees, such as education and health workers, have recently staged strikes over pay issues.

6. **On May 5, 2017, the Executive Board of the International Monetary Fund (IMF) concluded the Article IV consultation with Togo**. On that date, the IMF Board also approved a new three-year Extended Credit Facility Arrangement for Togo. Togo's economy has shown solid performance in recent years, with sustained growth and low inflation. The country's growth performance has been underpinned by high levels of public investment to address significant infrastructure gaps. However, this capital spending has also increased public debt and debt service pressures, crowding out needed social expenditures. At the same time, lingering deficiencies in the financial sector have remained unresolved.

7. **As part of the reform program, the GoT initiated increases in energy tariffs in March 2017, which resulted in population protests**. The recent increase in energy tariffs had the objective of reducing the fiscal impact of the sector, which are in part due to inefficiencies along the value chain, and an energy mix with high reliance on thermal generation. To date, Togo has among the highest average electricity tariffs in Sub Saharan Africa (SSA) (USc$19/kWh), although such tariffs remain below the cost of service. Further reforms are therefore needed to improve the financial viability of the sector.

B. Sectoral and Institutional Context

8. **Togo's energy sector activities are governed by the Ministry of Mines and Energy (MME). While the utilities remain public sector institutions, Togo has some private sector participation in generation.** The MME is responsible for electricity sector strategy and planning, whereas the *Compagnie Energie Electrique du Togo* (Public Distribution Utility - CEET) is the government utility responsible for transmission and distribution of electricity within the country. Although CEET maintains some marginal generation assets, it is mainly a distribution company, purchasing 50 percent of its electricity from the *Communauté Electrique du Benin* (Benin/Togo Generation and Transmission Power Utility - CEB), which is a binational entity co-owned by Togo

and Benin, and 50 percent from Contour Global, a private independent power producer (IPP). CEB was set up in 1960 to develop power generation and transmission infrastructure for the benefit of Togo and Benin. The electricity sub-sector regulatory agency, *Autorité de Reglementation du Secteur d'Electricité* (National Authority for the Regulation of the Electricity Sector - ARSE), was set up in 2000 within the MME structure. Togo is also a member of the Economic Community of West African States and the West African Economic and Monetary Union, a participant in the West African Power Pool (WAPP) and the West African Gas Pipeline, and as such made regulatory commitments regarding opening access to transmission networks, fair pricing, and transparency.

9. **The overall performance of Togo's electricity sector has been below the average of regional peers, including on energy access.** Although Togo's performance in terms of providing energy access is improving, the overall access rate in 2015 reached only 29.2 percent, lower than the SSA average of 37 percent.[3] Additionally, energy access in Togo shows important disparities between urban and rural areas, with a low-moderate access rate of 56.4 percent in urban areas, but a very low access rate in rural areas at 5.5 percent, significantly below the average rural electrification rate of 15 percent in SSA. Table 1 shows the current key parameters of Togo's electricity sector.

Table 1: Key Parameters of Togo's Electricity Sector

Electricity Access rate (2015)	29.2% (56.4% urban, 5.5% rural)
Number of electricity customers	290,000
Installed Capacity (2016)	205 MW of domestic power generation, of which: 100 MW, Contour Global Heavy Fuel Oil (HFO); 50 MW Diesel; 30 MW Hydro; 25 MW OCGT (CEB) As well as 95 MW of imports (mostly hydro)
Energy Mix (2016)	50% hydro, 50% thermal
Share of private sector in generation	50%
Average cost of service (2011-2015)	USc$29 per kWh
Cost of service (2015)	USc$29 per kWh
Average tariff (2016)	USc$19 per kWh
Total system losses (2016)	24%
Electricity Bill Collection Rate (2016)	90% Domestic and industrial consumers 36% Government bills
Level of Debt of utility (2016)	US$29 million (or 25% of annual revenues)

10. **Security of supply, reliability, and efficiency are major issues for Togo' power system.** Unreliable imports and lack of domestic sources of electricity have increased the frequency of power cuts, which have become prevalent in the country. In 2015, approximately 25 percent of businesses reported power cuts for more than 20 percent of business hours, 56.7 percent of businesses had cuts for less than 20 percent of operating hours, and only 16.5 percent of formal enterprises had not experienced electricity cuts in the last year. As a result, 49 percent of firms own or share a generator. Getting electricity is considered a high burden for doing business in Togo (in this area, the country ranks 147th out of 190 countries in the 2017 World Bank Doing Business report[4]). Electricity cost and reliability are also major business constraints according to Doing

[3] The performance of neighboring countries on access is mixed, however, with Ghana at 76 percent, Côte d'Ivoire at 59 percent and Benin at 29 percent.
[4] Doing Business 2017: Equal Opportunity for All. World Bank Group (2016).

Business report. Due to weak sector governance and lack of investment in and maintenance of the distribution system, the system also suffers from severe voltage drops and total system losses (i.e., technical and commercial) are high at a reported 24 percent in 2016.

11. **Togo's electricity supply relies heavily on imports from neighboring countries, which is a concern for Togo's energy security.** Togo has historically relied on regional power trade to serve its electricity consumers, benefitting from its WAPP membership. In 2015, 90 percent of Togo's electricity was imported from Nigeria and Ghana through CEB's interconnections, with the rest being supplied by Contour Global and other minor domestic sources. Overall, the impact of the regional power trade has proven to be positive for the power sector and the economy of Benin and Togo because of the lower cost of imported electricity compared to the cost of supply from national thermal generation units. However, power exports have not always been reliable, due to inconsistent hydrological conditions, unavailability of gas, or operational constraints. Togo has also been impacted by frequent disruptions created by issues in Nigeria's and Ghana's power systems at the generation and transmission levels. Although the regional supply mix is evolving with plans to further develop gas, hydro, and other sources, which will enhance security of supply via the WAPP, both CEET and CEB maintain a very high debt with utilities in the exporting countries, negatively affecting the reliability of imports from those countries. Specifically, Togo, through CEET, had to resort to directly purchasing power, and CEB's single rights on power purchase and imports were recently waived by the GoT and the Government of Benin (GoB) through a temporary decree. Unfortunately, these interim measures have contributed to degrade the cash situation of CEB, which has become critical. These issues need to be addressed through long term power purchase agreements (PPAs) with specific indemnity clauses, which should bring more certainty.

12. **This situation results in a non-payment chain that affects the entire electricity sector and increasingly spills over into neighboring countries.** The arrears accumulated by public sector entities to the CEET amounted to FCFA 44 billion (US$88 million) at end-2016 (36 percent of collection rate). As a result, CEET has not been able to honor its payments to CEB, accumulating arrears of FCFA 29 billion (US$58 million) at end-2016. Given that a similar situation exists with respect to the national distribution utility in Benin, CEB is doubly affected and has not been able to honor payment of power import contracts, accumulating debts of US$148 million (or 1.1 percent of the combined GDP of Togo and Benin) at end-2016: US$101 million with the *Transmission Company of Nigeria* (TCN - Nigeria); US$32 million with the *Volta River Authority* (VRA - Ghana); and US$15 million with the *Compagnie Ivoirienne d'Electricité* (Ivorian Electricity Company – CIE- Cote d'Ivoire). In addition, the combined debt of CEET and *la Societe Beninoise d'Energie Electrique* (Electric Energy Benin Company - SBEE) with respect to the CEB amounts to US$100 million. Concerns about the magnitude of these debts have prompted diplomatic actions of various kinds on behalf of the power exporting countries. At the request of a number of governments, the World Bank has initiated analytical work on the securitization of payments under WAPP. Moreover, the development policy operation (DPO)[5] that was prepared in parallel with this project, had prior actions that are focused on the arrears clearing between the Government, CEET and CEB and the establishment of a payment discipline of the public administration's electricity bills.

13. **The power sector struggles with financial sustainability and reforms are needed to improve sector performance.** Although high, the average tariff (USc$19/kWh) is below the generation cost (USc$29/kWh). The reasons for this unbalance are, mainly, (i) a systemic lack of planning capability; (ii) absence of an operational regulator with a systematic pricing mechanism; (iii) an obsolete organizational and legal

[5] Fiscal Management and Infrastructure Reform, P159884.

framework; (iv) poor utility performance; and (v) the shortage of financial resources for new investments and private sector attraction. All these factors are putting the power sector into an unsustainable situation. CEET has insufficient autonomy and commercial orientation, affecting its cost efficiency and financial discipline. It requires a Management Improvement Plan (MIP) to reform internal processes, create a revenue protection program and lay the basis for a sector performance contract with the Government. The implementation of such a plan will contribute to improving the financial equilibrium of the sector. One of the elements of the plan would be the management of generation dispatching, so that it follows clear economic criteria by giving priority in the dispatch to lower cost electricity supply coming from the regional interconnections when available. Togo could access cheaper power by improving arrangements for the dispatch of gas and power in the integrated power pool and by developing alternative generation sources from renewable energies. In the case of CEB, analytical work will be needed to determine the steps required to ensure financial viability of the utility.

14. **Going forward, Togo's challenge is to expand power generation in a way that balances cost-efficiency with energy security considerations**. Beyond imports from regional power trade, energy security considerations prompted Togo to develop additional domestic generation capacity in the form of an Independent Power Project signed with Contour Global in 2010 for a 100 MW HFO plant. Energy security brings important benefits but also carries an additional cost as oil-based generation was so far the only available technology for domestic production. Going forward, it is critical that additional investments be based on least-cost generation principles. The GoT should also explore solar IPP with storage, as prices are becoming cost competitive with some fossil fuel generation in some markets.

15. **The lack of sector planning tools prevents the Government from developing a roadmap on how to improve the service and reduce the cost, and limits Government's capacity to attract investments in the electricity sector.** Togo will need to secure additional capacity as demand for electricity services continues to grow quickly at an expected rate of around 8 percent per year. In this context, an extension of Contour Global for 50 MW is currently under preparation to prevent power shortage in a near future. However, the sector lacks a least cost generation plan that can assess the optimal type and size of new assets and that can recommend an adequate percentage of imports to address energy security concerns. Some of the prospective projects (domestic, regional projects and imports) will require a long development period, and it is therefore critical that the Government develops a generation and transmission master plan, built up together with CEB and WAPP, which includes long, medium and short term investments, and may include solar IPPs and other renewable energy projects.

16. **Investments in transmission and distribution over the past 20 years have been neglected and now need to be prioritized.** The improvement of quality and quantity of service through rehabilitation and strengthening of the distribution networks in urban and peri-urban areas, mainly in Lomé, is a priority to ensure reliability of the service and secure utility revenues through the addition of customers. A focus on Lomé is needed because of the urgency to rehabilitate and reinforce the backbone of the distribution network which urgently needs upgrades being the source of high technical losses (estimated at 11 percent). Failure to rehabilitate and modernize the distribution network of Lomé would result in load shedding, increased local diesel generation and continued high losses. According to the distribution system prefeasibility study prepared with European Union (EU) funding in September 2016[6], the total investment needed to rehabilitate, reinforce,

[6] *Togo–Diagnostic, renforcement, consolidation et extension du réseau de distribution de Lomé de la CEET. N° d'identification 2013/335152*
Togo-Diagnostic, reinforcement, consolidation and extension of Lomé CEET distribution grid. Identification n 2013/335152

and expand the distribution system in Lomé, including the connection of 40,000 customers in and around the city, amounts to US$75 million (excluding taxes). The EU study estimates 56 months for carrying out the plan. To significantly increase access to electricity in the rest of the country, a universal access program should be developed. Considering the geographical shape of the country, the grid connection would be feasible and relatively affordable in most of the country. An electrification prospectus is currently under development and would help the country to mobilize financing for the program.

C. Higher Level Objectives to which the Project Contributes

17. **The proposed project is in line with the Country Partnership Framework (CPF) FY17-FY20 (Report No. 112965-TG).** The proposed project will help address the governance challenges of Togo's electricity sector which has an important impact on its financial sustainability, operational performance, and ability to attract new investment. The project will also address the constraint of the costly and unreliable electricity provision mentioned in the CPF as one of the key constraints to the achievement of the World Bank Group (WBG) twin goals of reducing poverty and promoting shared prosperity.

18. **The project supports Togo's Strategy for Boosting Growth and Promoting Employment 2013–2017 that offers a medium-term development framework for implementing the General Policy Statement for making Togo an emerging economy in 15 to 20 years.** This document establishes five complementary, interactive, strategic pillars to realize this vision. The second of these pillars consists of strengthening of the economic infrastructure including, among others, the energy sector. According to the document, the main challenge of the sector is maintaining improved access and promoting national autonomy in supplying energy, at reasonable cost, while diversifying sources of energy, including clean and renewable forms. The proposed project is well-aligned with the GoT development strategy and its partnership with the WBG.

19. **The project will contribute to the World Bank's twin goals to end poverty and boost shared prosperity.** The World Bank "Directions for the Energy Sector"[7] which was approved by the Board in July 2013 describes how energy is an important engine of economic growth, on which both poverty reduction and shared prosperity depend. Inclusive economic growth is the single most effective means of reducing poverty and boosting prosperity. Most economic activity would be impossible without energy. The proposed project will support Togo in reaching its goals of increasing access to reliable and competitively priced electricity, which is essential for business development, job creation, income generation, and international competitiveness. The proposed project will also help improve the financial position of CEET through increased collected revenues, technical and commercial losses reduction, and increased number of customers. In parallel the World Bank Group (WBG) is supporting other activities in the energy sector in Togo. There is an - electrification prospectus under preparation, being supported by the World Bank, which will help the country mobilize concessional financing for rural electrification. A new World Bank financed energy access project will be prepared per the findings of the Prospectus.

20. **The project will facilitate private sector investment in power generation.** This project will help to improve the institutional environment, the financial sustainability, and the performances of the utility, which is the off taker for independent power producers. The World Bank through a DPO[8] will seek to improve the financial sustainability of the sector. To complement the DPO[8]8 above, an investment in a remote and centralized

[7] *Toward a Sustainable Energy Future for All: Directions for the WBG's Energy Sector*, The World Bank, July 2013.
[8] Fiscal Management and Infrastructure Reform, P159884.

smart metering system is envisaged in this project to support monitoring of energy consumption and billing collection. The project will also increase the power transit capacity of the distribution system to secure the delivery of the electricity produced by Contour Global to customers, with minimum technical losses. Therefore, this process follows the so-called cascade approach for enabling private sector participation. This approach implies an increased and more systematic emphasis on upstream reforms at the country and sector level ("mainstream the upstream") and a renewed determination to deploy concessional and public resources where they can have the greatest development impact ("shift the default"). The role of the WBG is to help governments systematically assess options and promote the reforms needed to close the infrastructure service gap. Moreover, the International Finance Corporation (IFC), is participating in the extension of Contour Global, that will provide an additional 50 MW of generation capacity to the system.

II. PROJECT DEVELOPMENT OBJECTIVES

A. PDO

The objective of the project is to improve the operational performance of the power sector and increase access to electricity in the capital city, Lomé.

B. Project Beneficiaries

21. The project is expected to reduce losses in the electricity distribution business, provide improved electricity service in rehabilitated network areas to 80,000 people, and improve the performance of the utility. Beneficiaries can be categorized in three groups. The first comprises households and small businesses in urban and peri-urban areas of Lomé. They will receive additional daily hours of electricity and a better voltage of electrical current that enables adequate running of motorized electrical equipment (for example, refrigerators, fans, and air conditioners). The second is CEET, which would collect increased revenues resulting from the implementation of the MIP and the regularization of informal electricity users. The third group are other key power sector stakeholders, including MME, CEB, and the regulatory agency (ARSE), which will benefit from technical assistance and capacity-building activities.

C. PDO-Level Results Indicators

22. Progress toward achieving the project development objective (PDO) will be measured by the following project outcome indicators:

- People provided with new or improved electricity service (number) (Corporate Results Indicator), of which women (percent).
- Distribution system loss in areas of Lomé affected by Lomé A, Lomé B and Lomé Siege substations (percentage).
- Increased collections from targeted high-consuming customers (percentage).

Intermediate indicators

- Distribution lines constructed or rehabilitated under the project (km).
- Distribution LV lines constructed under the project (km).

- Distribution transformer stations constructed or rehabilitated under the project (number).
- Power outages per year in substations rehabilitated by the project (US$).
- New household connections (number).
- Least cost development plan approved (Yes/No).
- Electricity sector master plan approved (Yes/No).
- Sector financial plan and viability assessment completed (Yes/No).
- MIP for CEET effective (Yes/No).
- Project related grievances registered under the project grievance redress mechanism (GRM) and addressed (percentage)

23. The full project results framework is included in section VII.

III. PROJECT DESCRIPTION

24. **The proposed project, which represents a re-engagement by the World Bank in Togo's energy sector, aims to help the country begin to address its energy sector challenges.** The proposed project, the World Bank's first in Togo since the 1990s, will focus on reducing technical and commercial losses; increasing access in the main urban area of the country, Lomé, which will eventually generate additional revenues for the utility; and promoting improvements in the management of the utility. The project will also support modernization of the sector's legal and regulatory framework and strengthening of MME's and CEET's planning capacity. In addition, improving billing collection in Lomé will increase the utility's cash flow and financial performance.

25. More specifically, the project will address Togo's power sector reform challenges by providing support to the GoT to (i) rehabilitate, reinforce, and expand the distribution network in the capital city of Lomé to reduce technical and commercial losses, improve the quality and reliability of supply, and increase access to electricity services; (ii) review and update the sector legal and regulatory framework; (iii) strengthen sector planning capacity to minimize system costs; (iv) develop a financial model for the sector and complete a viability assessment to analyze the sector financial situation and to propose measures to guarantee its sustainability with the lowest possible cost for customers; and (v) implement a MIP to improve the management of the utilities CEET and CEB and increase billing and collections in particular from targeted Government agencies.

A. Project Components

26. The project components are summarized below, with further details provided in Annex 1.

27. **Component 1: Power Distribution Improvement and Expansion (US$27 million, of which IDA US$26 million equivalent and GoT US$1 million equivalent)**. The project will finance the priority rehabilitation and reinforcement of the medium voltage (MV) and low voltage (LV) systems in Lomé, and the expansion of the network with new connections. The component is composed of three subcomponents, which are founded on the results of the EU-funded prefeasibility study mentioned above, as well as a Lomé MV network modeling exercise which identified the requirements for grid strengthening by 2020. The EU study undertakes a complete analysis of Lomé distribution network and determines a list of investments in rehabilitation and reinforcement to increase the access with 40,000 new connections and reduce the

technical losses within the city. The total cost of this investment list is estimated at US$75 million.

28. **This project proposes a first portion of investments, estimated at US$27 million**. The investments have been selected following the prioritization within the whole EU study and will also lay the grounds for further activities in the system. In parallel, the *Agence Française de Développement* (French Development Agency - AFD) is preparing a similar project that will undertake rehabilitation and reinforcement works in other areas and intends to complete the recommendations of the study. The two projects will be executed independently.

29. The component is divided in three subcomponents:

- ***Subcomponent 1.1: Rehabilitation of MV and LV Systems in Lomé (*IDA *US$15 million).*** This subcomponent will include the rehabilitation of Lomé A, Lomé B, and Lomé Siege substations, the rehabilitation of around 71 km of underground MV network cables, the construction of 10 new MT/BT transformer stations, and the rehabilitation of around 41 MV/LV transformer stations.
- ***Subcomponent 1.2: Reinforcement of the Lomé MV Network (IDA US$6 million equivalent).*** This subcomponent will finance the reinforcement of the MV system in Lomé. It will consist of the construction of around 39 km of underground MV cables, around 49 km of overhead MV lines, 9 MVar capacitor banks to reduce technical losses, and two switching stations. The objective of the reinforcement is to enable the network to sustain the growing demand in the coming years with minimal technical modifications and a reduction of technical losses.
- ***Subcomponent 1.3: Network Extension and New Connections (US$6 million equivalent* of which IDA US$5 million equivalent and GoT US$1 million equivalent*).*** This subcomponent will finance the expansion of the network in the outskirts of Lomé with 20,000 new connections. The extension will consist in the construction of around 225 km of LV lines and 5 MV/LV transformer stations to connect the new customers. In order to remove the high connection fee barrier (US$120 per connection), it is expected that the new consumers will pay upfront only a 20 percent of the connection fee and the project will initially finance the balance, to be recovered over time on their electricity bills. Any necessary resettlement compensation will be paid with counterpart funds under this subcomponent.

30. **Component 2: Power Sector Reform (IDA US$6.6 million equivalent).** The activities envisaged under this component are focused around four main areas (i) reform of the CEET and its relationship with the GoT with the preparation and implementation of a MIP as well as a review and reinforcement of the existing Revenue Protection Program targeting large customers and government electricity bill payment; (ii) planning, with the preparation of a master plan for generation, transmission, and distribution, and the strengthening of the planning capacities of the MME and CEET; (iii) preparation of a sector financial model and viability assessment; and (iv) a review of the sector legal and regulatory framework; (v) preparation of a diagnostic study of CEB and the implementation of reforms identified; and (vi) review of the performance contract with CEET. These activities are briefly described here below (more in detail in Annex 1):

    (a) Support for the reform of CEET is envisaged under this component which will cover the review of its Performance Contract and the preparation and implementation of a MIP. The MIP will help CEET meeting the requirements set in the sector reform included in this component. Furthermore, the GoT has expressed its intention to conduct an analysis of the latest Performance Contract, signed in 2016, with a possibility to evolve to new reform arrangements for the utility to increase

efficiency and revenues. The MIP will include tools to help CEET improve its operational and financial performance, including enhanced Financial Management Information System (FMIS) and monitoring capabilities, and human resources management activities in CEET. This plan will include the review and extension of the existing Revenue Protection Program that will be supported by physical investments in smart meters for large consumers.

(b) The project will support the preparation of a least cost development plan for an Electricity Sector Master Plan, which was a recommendation of the Energy Policy and Strategy document prepared by the GoT in 2011. The objective is to build the capacity of Togo's institutions on sector planning, which will provide the country with a long-term vision for the development of the electricity supply system throughout the territory indicating the infrastructure needs in generation, transmission, and distribution. The development of the Master Plan will include activities of capacity building in order to strength the planning capacities of the Ministry of Energy and CEET.

(c) Sector viability assessment and sector financial model, which will underpin a five-year plan with measures to improve the financial viability of the sector. The measures will have to systematically consider how to increase sector revenues, for instance by improving billing collection and reducing systems losses, with measures to reduce costs, which may require a shift in the energy mix, and the optimization of utility fixed costs. The viability assessment will provide recommendations on how to address the outstanding debt, as well as projections on the evolution of cost of service, which will inform the Government about the trajectory of energy subsidies over time. The assessment will also take into account improvements in financial viability that is expected from measures supported by this project to improve revenues from electricity sales to high-consuming customers. This will be complemented by the regional analytical work on ability to pay, distributional impact of any tariff reform, and identification of compensation measures to protect the poor and vulnerable with regards to tariff increases.

(d) Support will be provided to the GoT to review the sector legal and regulatory framework. Review of Togo Electricity Law. The Law needs to be reviewed and updated to include the development of renewables, energy efficiency provisions, and the establishment of a Rural Electrification Agency. The Electricity Law will also help to clarify the critical regulation aspects of the activities of ARSE, which does not currently play a true regulator role. Moreover, the actual Benin-Togo electricity code was amended several times to remove the single buyer provision that gives CEB the sole right to buy electricity from IPPs in the two countries. Given this evolution of the environment, it appears necessary to review the code and reform CEB that will likely need to reform the single-buyer model and introduce a wheeling charge for transport.

31. **Component 3: Project Management and Capacity Building (IDA US$2.4 million equivalent).** This component will finance project supervision and implementation management activities, including operational expenses, vehicles, offices equipment, and project supervision and project management capacity building.

- ***Subcomponent 3.1 Engineering consulting (US$1 million equivalent).*** This subcomponent will support the implementation agency in the activities included under Component 1 through the recruitment of an Owner's Engineer to assist the Implementation Agency in technical issues and in the procurement process.
- ***Subcomponent 3.2 Implementation Management Activities (US$1.2 million equivalent).*** This subcomponent will support various operating costs of the project management team (e.g., office equipment, project software, a project vehicle) and the external project audits. The subcomponent will also support the oversight of implementation of the safeguards plans, while the GoT will pay any

necessary resettlement compensation with counterpart funds under component 1.3.

- ***Subcomponent 3.3 Capacity Building Activities (US$0.2 million equivalent).*** This subcomponent will include staff training related to utility management and/or project implementation (e.g., procurement, financial management (FM), monitoring and evaluation (M&E), software systems).

B. Project Cost and Financing

Table 2: Project Cost and Financing

Project Components	Total Cost (US$ million)	IDA Financing (US$ million)	Counter-part Funding (US$ million)	% IDA Financing
1. Power Distribution Improvement and Expansion	27.0	26.0	1.0	96%
1.1. Rehabilitation of MV and LV System in Lomé	15.0	15.0		
1.2. Reinforcement of the Lomé MV Network	6.0	6.0		
1.3. Network Extension and New Connections	6.0	5.0	1.0	
2. Power Sector Reform	6.6	6.6	-	100%
3. Project Management and Capacity Building	2.4	2.4	-	100%
3.1 Engineering consulting	1.0	1.0		
3.2 Implementation Management Activities	1.2	1.2		
3.3 Capacity Building Activities	0.2	0.2		
Total	**36.0**	**35.0**	**1.0**	**97%**

C. Lessons Learned and Reflected in the Project Design

32. In terms of investment activities, the GoT's priority is to increase access to electricity. However, the experience accumulated in several SSA countries under electricity sector projects, including access projects financed by the World Bank, indicates the importance of creating an environment likely to ensure the financial viability of the sector so that the private sector can engage in electricity generation and along the entire value chain. Private-sector investments in generation will reduce the fiscal burden of the energy sector in the country, as well as introduce private sector know-how to achieve affordable and reliable electricity services. In addition, it will be necessary to ensure that the distribution infrastructure is robust enough to carry the electricity produced to the consumers. Based on these lessons, the project is focusing on steps to improve the institutional framework and financial viability of the sector by improving the performance of the electricity utility before supporting wider access expansion. The project will improve the conditions required to enable private sector participation in power generation, in particular. Specifically, the IDA project will support reforms to enable a better operating environment for IPPs. In addition, it will strengthen the distribution network to allow the delivery of the additional electricity generated for Lomé with a minimum of technical losses. "Low-hanging fruit" investments in terms of access expansion will be supported.

33. Lessons learned in other access projects in SSA (Côte d'Ivoire, Niger, Congo etc.) show that connection fees which are usually high (US$120 per connection, 21 percent of the GDP per capita in 2016), represent a barrier

for poor consumers to have access to electricity. Therefore, in this project, the initial connection cost will be reduced to the minimum (20 percent) and the difference will be recovered over a period of one or two years as part of the monthly electricity bills. This measure will promote social inclusion by encouraging consumers with limited financial capacities to easily subscribe for the connection.

34. World Bank experience in India, Turkey and more recently the Middle East suggests that tariff reforms are likely to be more successful if consumers receive improved quality of service delivery. Following the Arab Spring, and in the context of high electricity tariffs, Jordan successfully significantly reduced energy subsidies through a shift in the energy mix, and a reduction of inefficiencies along the value chain. The proposed approach takes into account this experience, as the project is expected to significantly improve the quality of service in Lomé, and will seek to improve billing collection from Government agencies and the high consuming customers, which typically have the ability to pay. The project will also support improved sector planning, which will consider how to reduce the cost of service over time, and take into account emerging opportunities for the import of affordable electricity from the WAPP. Finally, the project will establish a systematic process where all the revenue protection aspects are periodically considered to provide long term sustainability to the sector while ensuring the most affordable electricity to the consumers.

35. Experiences from countries in Latin America and South Asia have highlighted the major contribution of MIPs in turning around the operational performance and financial sustainability of power utilities. Hence, the design of the project has incorporated the development and implementation of this powerful tool, which usually involves the implementation of (i) management information systems; (ii) revenue protection plan; and (iii) organizational structure adjustments.

36. Based on the World Bank's experience of preparing and implementing the Emergency Infrastructure Rehabilitation and Energy Project (P113415) between 2010 and 2016, which involved the rehabilitation of distribution networks, CEET has demonstrated its technical capacity to manage and coordinate such activities. The project implementation arrangements are therefore informed by this recent project, with CEET to house the Project Implementation Unit (PIU) as well as handle all fiduciary aspects of the project, especially since MME does not have experience in implementing World Bank projects.

37. In previous projects, the important synergies have been generated when the WBG has been supporting investment projects that require sectoral reforms with parallel DPOs focused on specific policy actions to unlock the reform path. In this case, the simultaneous preparation of both operations has provided an opportunity to maximize the benefits of each instrument. Table 3 indicates the triggers included in the DPO[9] that are supported by this project.

[9] Fiscal Management and Infrastructure Reform, P159884.

Table 3. DPO[10] - Key Infrastructure Reforms: Triggers for Improving Financial Viability and Service Delivery in the Energy Sector

Triggers	Support by the proposed project
Trigger 4. To enhance commercial viability of the energy sector, the Recipient has agreed with CEET and CEB on a five-year plan with yearly targets for efficiency improvements and adjustments in tariff structure to ensure a better partitioning of the tariff among the distribution and transmission companies.	Supported by Component 2
Trigger 5. To ensure continued discipline in the use of and payment for electricity, the Recipient has implemented an effective plan for enhancing energy efficiency in the General Government and ensured that no new arrears to CEET have been incurred.	Supported by Component 2
Trigger 6. To strengthen the management of high-voltage and medium-voltage customer accounts, the CEET has approved a Revenue Protection Program which provides for the deployment of smart meters and a monitoring mechanism, and a management contract has been established with the Ministry of Economy and Finance.	Supported by Component 2
Trigger 7. To improve sector planning and governance, the Recipient has adopted a least-cost methodology to guide the expansion of power generation that integrates both domestic and regional options.	Supported by Component 2

IV. IMPLEMENTATION

A. Institutional and Implementation Arrangements

38. All the fiduciary activities will be carried out by a PIU based in CEET, given its biggest share of projects' activities. This PIU will be fully staffed by CEET and technically assisted by CEB and the relevant Ministry departments in defining technical specifications and terms of reference (ToR) for their respective activities within Component 2. A Project Implementation Manual (PIM) will define the role of each entity under the project. A PIU has been appointed within CEET, including the following functions: project coordinator, procurement specialist, technical specialists, FM officer, environmental and social safeguards specialist, M&E specialist, and project accountant. The PIU will receive specific training in World Bank guidelines and procurement rules. The PIU will be initially supported and trained by World Bank staff and individual consultants with expertise in the different fiduciary responsibilities.

39. The Owner's Engineer financed under Subcomponent 3.1 will provide support to the implementation of the project and to the PIU through expert staff in procurement activities to meet World Bank requirements and conducting supervision of investments under Components 1 and 2. The Owner's Engineer will also validate the technical specifications for activities under these components before procurement packages are put out for bid. However, the ultimate responsibility for project management will lie with the PIU. The project will be implemented in accordance with the PIM, which will be completed by CEET before effectiveness.

[10] Fiscal Management and Infrastructure Reform, P159884

40. A Project Steering Committee (PSC) chaired by the Minister of Energy will be established to provide advice on strategic questions related to the project implementation. The composition of the PSC was defined during appraisal and include representatives from CEET, ARSE, MME and the Ministry of Economy and Finance. The role of the PSC will be of importance in the supervision of the recommendations made by the consultancy work to be performed under Component 2. The Project PSC shall be responsible for: (i) reviewing and approving Annual Work Plans and Budgets; (ii) monitoring project progress towards achieving its objective and key indicators; (iii) ensuring inter-ministerial coordination as required for project implementation; and (iv) providing recommendations to help resolve any difficulties that the project may face during implementation.

41. The PSC shall meet at least annually and be responsible for project oversight.

B. Results Monitoring and Evaluation

42. Data for monitoring project outcomes and results indicators (see Section VII) will be compiled by the implementing agency (CEET)—with support from the Owner's Engineer. Updates on progress on results indicators will be reported through regular progress reports. Data will be generated by the different entities involved: CEB, MME, ARSE and CEET itself. The PIU will include a M&E specialist to track the indicators. The main indicators are aligned with key specific parameters of the sector that are generated and monitored periodically. The implementing agency has developed a specific methodology in order to systematically measure the respective parameters.

43. The Owner's Engineer, recruited under Subcomponent 3.1, will also provide inputs on technical, financial, and commercial aspects to complement the monitoring of the project outcomes.

C. Sustainability

44. The sustainability of the Togolese power sector will depend upon: (a) the financial health of CEET and CEB, their ability to generate sufficient revenues to fully cover operational expenditures, and eventually their investment costs as well; and (b) the GoT's continued commitment to support a comprehensive power sector reform program to be undertaken in the coming years to provide full functionality to CEB, the regulator, and a future rural energy agency. The initial step of the power sector reform will be initiated by this project and the DPO[11], supported by medium-term investments financed by the World Bank and other donors.

45. As indicated earlier, the debt of CEET is substantial, and estimated at twice the annual sales of the utility. In that regard, there is a parallel discussion with both Benin and Togo within the context of their respective DPOs, and the analytical work conducted by the World Bank, regarding non-payments on electricity imports within the WAPP. The project will assist with the debt sustainability by focusing on measures to increase revenues, namely though the reduction of losses and increased billing collection from high-consumption customers, and technical assistance to develop a financial model, assess the financial viability of the sector, and substantially improve sector planning, with the objective to reduce the cost of service.

46. **CEET and CEB's financial viability.** Distribution and customer supply of electricity are the main source of

[11] Fiscal Management and Infrastructure Reform, P159884.

revenue in the power sector value chain. Investments in adequate power generation, transmission, distribution, and operation and maintenance of power assets critically depend on the financial viability of distribution and supply utilities. In the context of Togo, 36 percent of all CEET revenues accrue from 0.2 percent of consumers (medium voltage high consuming customers), mainly industrials. Reflecting this necessity, the project supports CEET / CEB to improve the collection of the highest revenue share by developing and implementing a revenue protection program that includes better metering and monitoring of high-revenue customers. In addition, the project intends to reduce CEET and CEB's commercial and technical losses through network upgrades and prepaid meter installation and improve the utility's internal processes.

47. CEET and CEB's financial and operational performance will ultimately ensure the long-term sustainability of the electricity sector. Both utilities should be managed and operated by experienced and professional operators with an incentive to maintain, upgrade, and keep infrastructure/systems running smoothly. Component 2 of the project intends to promote the appropriate managerial and organizational improvements within the companies through private-sector, expert assistance.

D. Role of Partners

48. The project will enable the institutional framework and improve the financial viability of the sector by supporting the improvement of the performances of the utility. A Public Private Infrastructure Advisory Facility (PPIAF) trust fund (TF) support is envisaged to provide transaction advisory services to the GoT for the negotiation to increase the generation capacity of the IPP

49. The project has been prepared in parallel with an International Finance Corporation (IFC) operation to increase the generation capacity of the existing Contour Global IPP, which will be extended by an additional 50 MW of generation. The first phase of Contour Global IPP was also supported by IFC.

50. Complementary joint AFD/EU support is also under preparation to increase access to electricity subsequent to the strengthening of the network under the World Bank-funded project. A distribution systems control and data acquisition (SCADA) system will be developed under the AFD/EU project to improve the management of the distribution network. Specifically, the AFD project, expected to be approved in 2018, is linked to World Bank activities in distribution under this project, extending the network and connection to new customers, thanks to the rehabilitation and reinforcement of a source substation included under Component 1. Rural electrification activities are under preparation by the *Deutsche Gesellschaft für Internationale Zusammenarbeit* (German Corporation for International Cooperation – GIZ) with a special focus on the off-grid and mini-grids. For the remaining investments in the sector (both urban and rural) an electrification prospectus is under preparation to seek support from the donors.

V. KEY RISKS

A. Overall Risk Rating and Explanation of Key Risks

51. The overall project risk is rated **substantial**. Key risks are discussed below.

52. **Political and governance:** Risk is rated as **high.** Togo's centralized system of governance provides little accountability on the part of public institutions and results in low levels of state capacity and weak incentives to formulate and implement policies that are favorable to poverty reduction. Two dimensions in particular are key to Togo's progress: control of corruption and the credibility of the Government's commitment to such policies. In recent years, when Togo has made improvements in both indicators, growth has responded positively in subsequent years. Yet, despite increased government effectiveness since 2010, Togo's control of corruption has fallen to the 16.8th percentile on the Worldwide Governance Indicators list[12]. **Mitigation**: The World Bank will continue supporting the Government in its efforts to improve governance and pursue decentralization, in partnership with other development partners, and support progress toward outstanding political reforms. The risk will be also mitigated by the whole engagement of the WBG and coordination with other donors, including a coherent approach with the DPO[13] and other WBG activities.

53. **Macroeconomic:** Risk is rated as **high**. Lingering political tensions may adversely affect economic performance through dampened consumer and investor sentiment, which may pressure the Government to slow down the ambitious fiscal consolidation program should public discontent continue to grow. Second, the fiscal consolidation process may also be hampered by increased security and election related spending in 2018. Third, the country's poor business environment may continue to impinge on the country's growth, with the performance of public banks continuing to weaken the financial sector. These sources of risk could potentially jeopardize the achievement of the implementation of structural reforms, including power sector, which in turn will adversely affect the ability and willingness of the Government to clear arrears and continue timely bill payment. Moreover, GoT critical investments in the sector could be delayed, in particular those required to promote a shift in the energy mix and to lower the cost of service delivery, such as solar and hydropower generation. **Mitigation**: The DPO[13] will include specific prior actions and indicative triggers to secure power sector reform and ensure its sustainability. Additionally, a three-year Extended Credit Facility (ECF) for the period 2017-19 was approved by IMF on May 5, 2017, with the main objective of bringing public debt in line with the targets of the West Africa Economic and Monetary Union (WAEMU).

54. **Sector policies and strategies:** Risk is rated as **substantial**. The sector lacks a policy framework and planning strategy to determine investments priorities. **Mitigation**: The project will develop a master plan for the generation transmission and distribution based on the least cost approach, and will support the development of a financial model for the sector, as well as a viability assessment. This will provide options to Government in its efforts to reduce the fiscal burden of the sector, while promoting affordable and reliable electricity services.

55. **Technical design of project:** Risk is rated as **moderate.** Although the project will use well-established technologies and presents no unusual construction or operational challenges, there may be different technical approaches and standards by the involved entities (CEET and CEB). **Mitigation:** to properly harmonize the technical solutions, the PIU will ensure continued coordination between technical staff responsible from both entities during project implementation. Moreover, the implementation will be coordinated with other projects to strengthen the distribution network in Lomé, namely the project under preparation by the AFD.

56. **Institutional capacity for implementation and sustainability:** Risk is rated as **substantial.** MME is

[12] *Worldwide Governance Indicators – www.govindicators.org*. The WBG. Last data for Togo is for 2014.
[13] Fiscal Management and Infrastructure Reform, P159884.

inexperienced in implementing investment projects financed by multilateral institutions, and it was therefore decided that the fiduciary responsibilities of the project management will rely on the PIU housed in CEET. CEET has developed in a recent past, some project management capacities through the implementation of activities financed by other donors. However, it is envisaged that CEET's procurement, financial, and safeguard capacity will need to be enhanced at the beginning of the project. In addition, the project may present some challenges due to lack of technical coordination between the entities involved in the sector. **Mitigation**: The PIU will incorporate technical coordination activities with the respective entities. Technical specifications for investments must be discussed with the respective technical teams. With regards to costs, the cost estimates have been provided by a very recent study from the EU and are deemed to be in line with current market prices. Moreover, the Owner's Engineer will supervise the activities under Component 1 to ensure adequate implementation and best practices.

57. **Fiduciary:** Risk is rated as **substantial**. Although CEET has experience in projects financed by other bilateral and multilateral donors, this will be its first experience as an implementing agency for an IDA-financed project after 20 years, which might pose a substantial risk during implementation. **Mitigation**: An experienced coordinator and other experienced staff have been appointed in the PIU. During implementation, the PIU will be also supported by World Bank staff and individual consultants with expertise in different fiduciary responsibilities (procurement, FM, social and environmental safeguard).

VI. APPRAISAL SUMMARY

A. Economic and Financial Analysis

58. An economic and financial analysis was conducted, comparing the cost and benefits with and without the project. The analysis considered Component 1 as it is the only one with capital investments. A full discussion of the economic and financial analysis is given in Annex 4.

59. Investment costs were derived from estimates provided by CEET. The analysis accounted for factors such as technical and commercial losses, demand increase due to growth in customer base, as well as demand increases per customer, cost of distribution network strengthening and expansion, cost of connection and/or prepayment meter fees, etc.

60. Economic benefits include those deriving from additional consumption of electricity by newly connected households. These benefits were conservatively estimated by assuming that the value consumers derive from electricity consumption are equal to the US$0.25/kWh (willingness to pay). Other potential benefits that the project could induce that are not quantified for the economic analysis include environmental benefits resulting from reduced specific diesel-based generation and benefits that electricity brings through employment opportunities, health, and safety.

61. In line with the World Bank's new Guidance on Discount Rates for the Economic Analysis of Investment Projects, the discount rate for the economic analysis is set at twice the medium to long term real per capita GDP growth forecast for Togo which is estimated at 3.5 percent. Therefore, the economic discount rate is 7 percent.

62. **The investments yield an economic internal rate of return (EIRR) of 20.6 percent and Economic Net Present**

Value (NPV) of US$171.3 million before environmental benefits. These results are based on a consumer willingness to pay of US$0.25/kWh and the assumption that all new connections made possible by the project are actually realized and distribution network losses reduction is 1 percent per year. The table 4 below shows a breakdown of the NPV.

Table 4: Parameters and Results of Economic Analysis

	Elements	Unit	Value
[1]	Discount rate	[%]	7.0%
[2]	**Economic rate of return**		
[3]	ERR	[%]	20.6%
[3]	ERR+local externalities	[%]	20.6%
[4]	ERR+local+GHG@BankGuidanceValues	[%]	22.1%
[5]	**Cost**		
[6]	Existing generation cost	[US$ million]	-183.5
[7]	Distribution capital cost	[US$ million]	-27.0
[8]	Distribution O&M	[US$ million]	-13.0
[9]	Distribution Commercial Costs	[US$ million]	-35.3
[9]	connection costs	[US$ million]	-2.4
[10]	pre-paid meters	[US$ million]	-1.6
[11]	**Total costs**	**[US$ million]**	-262.8
[13]	**Benefits**		
[14]	Consumer benefits, extension	[US$ million]	294.4
[15]	Consumer benefits, densification	[US$ million]	0.0
[16]	Consumer benefits, other consumers	[US$ million]	0.0
[17]	Loss reduction	[US$ million]	139.7
[18]	**Total benefits**	**[US$ million]**	434.1
[19]	**NPV (before environmental benefits)**	**[US$ million]**	171.3
[21]	local environmental benefits: self-generation	[US$ million]	0.0
[22]	local environmental benefits: grid generation	[US$ million]	0.0
[23]	NPV (incl. Local environmental benefits)	[US$ million]	171.3
[24]	GHG emissions damage reduction benefits	[US$ million]	9.7
[25]	**NPV (including environment)**	**[US$ million]**	181.0
[27]	**Lifetime GHG emissions**	**[1000 tons]**	**886**

Source: Economic and financial analysis model.

63. Greenhouse gas (GHG) accounting has been undertaken for the project, which will result in GHG emission reductions. The implementation of the project will result in an estimated net reduction of GHG emissions of 886,000 tons of CO_2 equivalent over the lifetime of the project due primarily to the use of electricity for heating and cooking which occurs when a household gains access to electricity.

64. **The overall EIRR and NPV of the project would remain robust under all sensitivity scenarios.** Scenarios analyzed include a decrease in consumer Willingness to Pay (WTP), a decrease in low voltage tariff, an increase in investments costs, an increase in average generation costs, and a reduction in distribution losses improvement rate. A summary of the analysis is provided in Table 5 below.

Table 5: Switching Values

Scenario elements	Unit	Base	Switching Value (Economic)	Switching Value (Financial)
Consumer WTP	[US$/kWh]	0.25	0.151	
Low Voltage Tariff	[US$/kWh]	0.19		0.1251
Investment costs	[US$ million]	27	152	64
Cost of generation	[US$/kWh]	0.12	0.241	0.163
Distribution losses reduction rate	[%]	1	-0.295	0.532

65. **The financial analysis confirms that the project will be financially viable.** The financial analysis of the project results in a financial internal rate of return of 10.2 percent and a financial NPV of US$46.4 million. Details of the financial analysis, the revenue, and tariff assumptions are included in Annex 4.

Financial Analysis of CEET

66. The financial viability of the sector is highly influenced by the financial situation of the CEET as the sole state owned electric utility. A financial analysis of CEET was undertaken to assess its financial viability by analyzing the historical performance and the financial projections; it shows that the financial position of the company is weak and will stay poor over the projected period 2016-2021. The financial model only provides projected data up to 2021 and FY2016's financial statements are estimated as they are not yet available. The details of the financial analysis are provided in Annex 4.

67. The analysis of CEET historical and current financial situation shows that CEET is vulnerable due to its poor operational and commercial performance. CEET's average cost of service, which is around FCFA/kWh (US$0.29/kWh) 2011-2015, is considered high. The cost of service followed a volatile pattern exemplifies by an increase of 4 percent in 2012 and a decrease of 12 percent in 2014. This erratic movement was due to both to fuel price fluctuations and cost of power purchased from the Contour Global IPP, which is dependent on fuel prices.

68. CEET commercial performance is poor, characterized by a poor collection rate on Government bills and a high level of indebtedness. As a result of low level of revenue collected relative to the cost of service, CEET experienced a growing negative margin over the entire period 2011-2015 averaging 16 percent of revenue collected per kWh. The activities envisaged in the MIP of this project will contribute to improve the commercial performance of CEET.

69. CEET is a highly-leveraged company which funds its investment program mainly with debts. In 2015, the debt load was twice the size of the equity as the chronic deficit eroded the equity of the company, leading to higher interest expenses from the high level of debt accumulated. The utility is trapped in this "vicious circle", characterized by an unsustainable debt load combined with a chronic deficit, and a tariff which is not able to cover the resulting high costs of service.

Results of projections in 2017-2021

70. The results of the five-year financial projections show that CEET will still be trapped in the above-mentioned vicious circle. CEET's cost of service while already relatively high is projected to remain high in 2017 and will follow steadily the same trend from 2017 up to 2019, before decreasing in 2021 to 123 FCFA/kWh (24.6 US Cents/kWh). The reasons for this decrease will be the reduction of technical and commercial losses and the improvement in utility management, which will be supported by investments and reforms under this project.

71. The company is not able to cover its current expenses until the end of the study period. The cash flow available to cover the debt service remains negative except at the end of the period (2020-2021) when it changes to positive values, due to the results of the sector reforms and the implementation of the project.

72. The energy sold per employee and the energy sold per customer are expected to be stable from 2016 to 2019 with an average around 668 kWh per employee and 2 kWh per customer respectively. Beyond 2019, the performance related to these metrics is expected to improve, but not enough to impact materially the commercial performance of the company.

73. Without an improvement of its commercial performance in sight, CEET will continue to face poor profitability, liquidity issues, high debt leverage and low asset efficiency. The company is forecast to not be able to cover its costs related to its financing obligations as the company cash flow available to cover its debt service until the end of the period of study (2020-2021).

B. Rationale for public sector provision/financing

74. Due to the high stress suffered by the power sector in Togo, private sector financing would be difficult to secure for the proposed investments due to the risk profile of the energy sector and the long payback periods. Therefore, WBG and other donors' support would be essential to establish financial equilibrium, laying the foundation for the mobilization of investment financing needed to expand the sector further. Within this context, the project will contribute to a further improvement of the country's framework for future private participation and investment in the energy sector.

C. Value added of Bank's support

75. The WBG has global and long experience in power sector reform and energy access programs, including in SSA, to provide reliable, affordable and sustainable energy services. Although this project would be the first World Bank operation in the energy sector in Togo since 1990, the World Bank is thoroughly involved in the sector in the region, including via the WAPP and in Benin, which shares a common interest in the energy sector with Togo. Therefore, the World Bank has accumulated significant knowledge and is well placed to assist Togo in designing and implementing a power sector reform and investment program.

D. Technical

76. The project will use well-established technologies and presents no unusual construction or operational challenges. The equipment and the technologies involved in reinforcement and rehabilitation of distribution infrastructure are well known in SSA in general and in Togo:
    i. Component 1. The feasibility of the activities under this component have been analyzed under a

specific analysis carried out by the EU in 2016. That study also set cost estimates that have been appraised and are deemed to be in line with current market prices. The Owner's Engineer will supervise the activities under Components 1 and 2 to ensure adequate implementation.

ii. Component 3. Costs of the Owner's Engineer have been estimated based on current market prices and the intended scope.

77. As part of the project implementation arrangements, and as is common for these types of projects, an Owner's Engineer firm will be contracted. This firm will help to ensure that execution of Component 1 investments is carried out in accordance with the applicable ToR and international best practices.

78. For sector reform activities, the appraisal has shown readiness from the involved implementation entities. The technical implementation will be supported by the MME, ARSE, CEET and CEB. These entities have already identified their needs for support under Component 2.

E. Financial Management

79. The PIU in CEET, under the oversight of a PSC chaired by the Minister of Energy, will be responsible for coordinating the day-to-day implementation of the project, including FM, organizational aspects, and M&E. The PIU has no previous experience with IDA FM procedures, but contains qualified FM officers who will be trained to support the new project FM system. The assessment of CEET's FM team has revealed some strengths and weaknesses. The following major strengths were identified: (i) the existence of qualified and experienced FM staff and a FM system with adequate separation of duties; and (ii) the existence of an Internal Audit Unit, which will need to update its work-program to include the new project's internal auditing. The weaknesses identified include (i) lack of familiarity with IDA procedures for reporting, disbursement arrangements, and auditing; and (ii) CEET's current accounting software and manuals of accounting procedures are no longer appropriate.

80. The overall FM risk for the project is rated **substantial**. It is considered that the FM will satisfy the World Bank's minimum requirements under World Bank Investment Project Financing (IPF) Directive and Policy once the proposed mitigation measures are met.

81. In order to reinforce the internal control system and mitigate FM, fraud and corruption risks, the following actions have been incorporated into the project design: (i) the recruitment of a short term qualified and experienced FM Expert to ensure adequate ownership by CEET's current FM team; (ii) the dedication of one accountant who will be fully dedicated to the accounting and disbursements tasks of the proposed project; (iii) the development of a comprehensive financial and accounting manual of procedures, as part of the PIM; (iv) the procurement of an adequate accounting software; (v) the recruitment of an independent external auditor based on acceptable ToR; and (vi) all FM staff whose capacities need to be strengthened will be trained during project implementation based on a training plan which includes, inter-alia, training on IDA disbursement procedures, and training on IDA financial reporting arrangements.

F. Procurement

82. The Borrower will carry out procurement for the proposed project in accordance with the World Bank's "Procurement Regulations for IPF Borrowers" (Procurement Regulations) dated July 2016 under the "New

Procurement Framework (NPF), and the "Guidelines on Preventing and Combating Fraud and Corruption in Projects Financed by IBRD Loans and IDA Credits and Grants", dated October 15, 2006 and revised in January 2011, and other provisions stipulated in the Financing Agreements.

83. As part of the preparation of the project, the Borrower (with technical assistance from the World Bank) has prepared a Project Procurement Strategy for Development (PPSD), which describes how procurement activities will support project operations for the achievement of project development objectives and deliver Value for Money. The procurement strategies are linked to the project implementation strategy ensuring proper sequencing of the activities. They also consider institutional arrangements for procurement; roles and responsibilities; thresholds, procurement methods, and prior review, and the requirements for carrying out procurement. The PPSD also includes a detailed assessment and description of government capacity for carrying out procurement and managing contract implementation, within an acceptable governance structure and accountability framework. The PPSD rates the procurement risk for this project as Moderate after the implementation of the institutional arrangement described in Annex 2.

84. A detailed procurement description and institutional arrangements can be found in Annex 2.

G. Social (including Safeguards)

85. The extension of the transmission and distribution network, the installation of high voltage substations, and the rural electrification are likely to result in potential involuntary resettlement and land acquisition. Therefore, the OP/BP 4.12 on Involuntary Resettlement is triggered, and a Resettlement Policy Framework (RPF) that will guide the involuntary resettlement, land acquisition and, in some cases for the rural electrification program, and RPF has been developed by the CET, consulted and disclosed publicly and in the World Bank intranet on October 5, 2017. Involuntary Resettlement (OP/BP 4.12) is triggered in the context of the project activities which may potentially lead to land acquisition. New distribution lines might require some land acquisition and involve compensation, and potentially, limited relocation and displacement of households and assets. Some small-scale land acquisition and/or losses of assets may occur as a result of constructing and expanding the grid to the locations. These specific impacts have not been identified yet and will be subject to the future preparation of eventual Resettlement Action Plans (RAPs). The cost of land acquisition and compensation will be covered by the Borrower. A RAP for the known locations, which addresses such negative social impacts on women or men, and contains a compensation framework for the affected households, will therefore be prepared, consulted upon and disclosed prior to the commencement of the civil works.

86. Coordination and implementation of project environmental and social safeguards will be carried out by CET which will reinforce its staffing by recruiting a social specialist to be responsible for ensuring project compliance with the social safeguards instruments in accordance with national and World Bank policies and procedures; CET already has experienced an environmental specialist. However, they will be trained, together with their regional counterparts, in the implementation and monitoring of World Bank safeguard policies. CET will ensure adherence to the safeguard documents of all agencies involved in the implementation of the project, including contractors. All contractor bidding documents will include specific environmental and social clauses. Consulting engineers' contracts will include provisions for overseeing the implementation by the contractors of the environmental and social clauses. To reinforce safeguards capacity in the regions, the Owner's Engineer will be mandated to supervise these issues. CET will produce on a

quarterly basis, reports on the compliance with the safeguard documents.

H. Citizen engagement

87. Community engagement activities financed by the project will include a survey to analyze access to electricity under the multi-tier framework[14]. CEET has already in place a call center for the outage management system, which enables the utility to receive feedback from the customers in case of outage. CEET is interested in improving this call center to include the assessment of the degree of satisfaction of their customers. As part of the project, a survey will be organized to measure the impact of the project, and customers' degree of satisfaction. The survey findings will be published to promote transparency and accountability in the utility. The survey will pay special attention to women's satisfaction with electricity service and women's awareness of available consumer feedback mechanisms (i.e., call centers) that they can use to raise their complaints and grievances. The survey sample will include married women, widows, and single mothers, and the survey will collect and report gender-disaggregated data.

I. Environment (including Safeguards)

88. The main positive environmental impacts will be the improvement of security conditions; the reduction of GHG emissions related to the use of diesel during power outages; as well as the reduction of noise nuisance; and the reduction of trees cutting to produce energy.

89. The planned project will finance physical infrastructure investments and triggers OP 4.01 on Environmental Assessment; OP 4.11 on Physical Cultural Resources and OP 4.12 on Involuntary Resettlement. It will likely entail site-specific and largely reversible environmental impacts. For this reason, the project is rated as Environment Assessment category "B".

90. To ensure compliance with OP/BP 4.01, an Environmental and Social Management Framework (ESMF) was developed by the Borrower. The ESMF contains a specific chapter to address all issues related to Physical Cultural Resources. After its elaboration, the ESMF has been consulted upon and disclosed within Republic of Togo and at the World Bank on October 5 and 6, 2017. The ESMF outlines an environmental and social screening process, including institutional responsibilities for screening, review and clearance, and implementation of mitigation and monitoring measures, for future investments. This screening process consists of (i) an environmental and social screening form to determine potential adverse environmental and social impacts and record the outcome of consultations; (ii) an environmental and social checklist with generic mitigation measures to be adapted to the specific investment; (iii) a summary of the World Bank's safeguard policies; (iv) an Environmental and Social Management Plan (ESMP), including environmental monitoring indicators and capacity building activities; (v) Environmental Guidelines for Contractors; and (vi) generic environmental impact assessment ToR. It is also designed to serves as a guide for developing Environment and Social Impact Assessments (ESIA) including ESMPs as needed.

91. In addition to the ESMF, and with the aim of making sure that all potential adverse impacts associated with activities for Lomé A, Lomé B and Lomé siege sub-stations are under control, an Environmental Audit was

[14] The multi-tier approach to measuring energy access proposed in the SE4ALL Global Tracking Framework of 2013 introduces a five-tier measurement methodology based on various energy attributes, such as quantity, quality, affordability, and duration of supply. The approach makes it possible to compute a weighted index of access to energy for a given geographical area.

also realized. As the ESMF, all these safeguard instruments have also been reviewed, consulted upon and disclosed both in Togo and at the World Bank's website before the decision meeting.

92. The Financing Agreement will require the Government to prepare and submit to the World Bank for prior approval and disclosure any required ESIAs including ESMPs in accordance with the ESMF, for the activities proposed to be carried out under the ongoing operation. Prior to commencing any works, the Government will take all actions required by the ESMP and obtain the World Bank's confirmation that the works may commence. Finally, the Government, through the PIU, will report quarterly to the World Bank on the environmental safeguard measures taken through a specific Safeguard Monitoring Report and a summary of this specific report to be included in the periodic project progress reports.

J. Gender

93. In the last decades, Togo has engaged in several efforts at the national level to promote gender equality and foster women´s empowerment. The 1992 Constitution provides equal rights for women and men. While a General Directorate for the Advancement of Women existed since 1977, a Ministry for the Promotion of Women was established in 2010, and a National Policy on Gender Equality and Equity was adopted in 2011. The country also ratified the Convention on the Elimination of All Forms of Discrimination against Women (CEDAW) in 1983, although it has not yet ratified the Protocol on Violence Against Women. Togo also has reformed its family code to remove the provision that designated husbands to be head of household.

94. Despite efforts to move the gender agenda forward, gender-based inequalities persist in many areas in the country such as in the lack of access to education and economic opportunities, tax provisions, high levels of domestic violence, and low representation in high-level decision making positions. The 2011 National Policy on Gender Equality and Equity made the link between gender equality and energy poverty, but the National Energy policy does not address gender considerations in its design, planning and interventions. Hence, the presence of women in energy employment is still low: only 140 of 818 (17 percent) employees in the implementing agency, CEET, are women.

95. As part of the project preparation, the World Bank team discussed with potential project beneficiaries to learn about their needs and concerns and investigate how the project can better support them. The interviews highlighted some gender-specific dynamics that often discourage women's participation in decision-making processes that influence their access to and use of electricity. During community meetings, women rarely participated in the discussion as they usually left it to the men to speak on their behalf. With regards to household dynamics, women often were not consulted when meters and kits were installed and the husband usually decided if or not to get the electricity connection.

96. The project team will collaborate with the Africa Renewable Energy Access Gender and Energy Program (P149119) to look at relevant gender dimensions under the project, particularly as related to access. The focus will be on the payment and application procedure for the new electricity connections, information campaigns, consultation processes under the social safeguards, and the National Electricity Strategy. Actions to respond to gender differences will include a survey of potential new clients to identify their constraints to obtaining an electricity connection; designing information campaigns about the project and its benefits so they reach women and other groups with limited access to information to encourage their demand for a connection; and building the capacity of project staff managing the application process to ensure that female and male clients are treated equally and provided assistance to complete the application

successfully. Potential innovative financing mechanism for electricity connections, such as deferred charges and flexible eligibility criteria, will be investigated to ensure that women particularly low-income female household heads and small business owners, can have access to and benefit from the economic opportunities associated with having electricity. In addition, the project's M&E system will generate sex-disaggregated data on project activities and outcomes to adequately monitor and report on the impact of improved energy services on female and male beneficiaries.

K. Climate and disaster risks

97. Potential climate and disaster risks that could affect the project's activities relate to expected changes in precipitation causing increased frequency and intensity of floods and droughts. These factors might damage or reduce the effectiveness of grid distribution. Grid power infrastructure generally has a long lifespan. The major risks for project investments are: (i) flood-related physical damage to the generation and distribution infrastructure; and (ii) reduced effectiveness of off-grid power supply due to floods or droughts. Technical design and implementation will take this into consideration to mitigate these risks.

L. World Bank Grievance Redress

98. Communities and individuals who believe that they are adversely affected by a World Bank (WB) supported project may submit complaints to existing project-level grievance redress mechanisms or the WB's Grievance Redress Service (GRS). The GRS ensures that complaints received are promptly reviewed in order to address project-related concerns. Project affected communities and individuals may submit their complaint to the WB's independent Inspection Panel which determines whether harm occurred, or could occur, as a result of WB non-compliance with its policies and procedures. Complaints may be submitted at any time after concerns have been brought directly to the World Bank's attention, and Bank Management has been given an opportunity to respond. For information on how to submit complaints to the World Bank's corporate Grievance Redress Service (GRS), please visit http://www.worldbank.org/en/projects-operations/products-and-services/grievance-redress-service. For information on how to submit complaints to the World Bank Inspection Panel, please visit www.inspectionpanel.org.

VII. RESULTS FRAMEWORK AND MONITORING

Results Framework
COUNTRY : Togo
Energy Sector Support and Investment Project

Project Development Objectives

The objective of the project is to improve the operational performance of the power sector and increase access to electricity in the capital city, Lomé.

Project Development Objective Indicators

Indicator Name	Core	Unit of Measure	Baseline	End Target	Frequency	Data Source/Methodology	Responsibility for Data Collection
Name: People provided with new or improved electricity service	✓	Number	0.00	80000.00	Annual	CEET customer database	PIU- CEET
People provided with access to electricity by hhold connections-Grid		Number	0.00	80000.00	Annual	CEET customer database	CEET-PIU
Women provided with new or improved electricity connection		Number	0.00	40000.00			
Description: This indicator measures the number of people that have received an electricity connection under the project via new connections aimed at connecting households. The baseline value for this indicator is expected to be zero.							
Name: Distribution system loss reductions in areas of Lomé affected by Lomé A,		Percentage	24.00	20.00	Annual	CEET technical statistics	CEET-PIU

Indicator Name	Core	Unit of Measure	Baseline	End Target	Frequency	Data Source/Methodology	Responsibility for Data Collection
Lomé B and Lomé Siege substations							
System loss reductions in areas of Lomé affected by Lomé A, Lomé B and Lomé Siege substations- Technical		Percentage	11.00	9.00			
System loss reductions in areas of Lomé affected by Lomé A, Lomé B and Lomé Siege substations- Non-Technical		Percentage	13.00	11.00			
Description: This indicator is calculated by dividing total electricity losses (i.e. the sum of technical and non-technical losses) by the total net injected generation in the project area. The baseline is the actual electricity losses in the project area at the beginning of the project.							

Name: Increased collections from targeted high-consuming customers		Percentage	0.00	4.00			
Description: This indicator measures the increase of bill collection in percentage from high consuming customers, calculated as revenues divided by billed energy from high-consuming customers. Baseline is zero as indicator measures the increase of collection. High consumer costumers are the customers connected to MV, mainly industrials.							

Intermediate Results Indicators

Indicator Name	Core	Unit of Measure	Baseline	End Target	Frequency	Data Source/Methodology	Responsibility for Data Collection
Name: Distribution lines constructed or rehabilitated under the project		Kilometers	0.00	159.00	Annual	CEET-PIU Project statistics	CEET-PIU and Owner's Engineer
Distribution lines constructed under the project		Kilometers	0.00	88.00			
Distribution lines rehabilitated under the project		Kilometers	0.00	71.00			
Description: This indicator measures the length of the distribution lines constructed or rehabilitated/upgraded under the project. The baseline value for this indicator is expected to be zero.							
Name: Distribution LV lines constructed under the project		Kilometers	0.00	225.00	Annual	CEET-PIU Project statistics	CEET-PIU and Owner's Engineer
Description: This indicator measures the length of the distribution LV lines newly constructed under the project. The baseline value for this indicator is expected to be zero.							
Name: Distribution transformer stations constructed or rehabilitated		Number	0.00	56.00			

Indicator Name	Core	Unit of Measure	Baseline	End Target	Frequency	Data Source/Methodology	Responsibility for Data Collection
under the project							
Description: This indicator measures the number of distribution transformers constructed or rehabilitated/upgraded under the project. The baseline value for this indicator is expected to be zero.							
Name: Power outages per year in substations rehabilitated by the project		Number	33.00	10.00			
Description: This indicator measures the average number of power outages per year suffered by the substations that are rehabilitated by the project. Baseline is 33 as per data provided by CEET for 2016.							
Name: New household connections		Number	0.00	20000.00			
Description: This indicator measures the number of households that are connected to CEET grid under the project. Baseline for this indicator is zero.							
Name: Least Cost Development Plan approved		Yes/No	N	Y	Annual	CEET-PIU Project information	Ministry of Energy
Description: This indicator measures when the Least Cost Development Plan is approved by the Government.							
Name: Electricity Sector Master Plan approved		Yes/No	N	Y	Annual	CEET-PIU project information	Ministry of Energy

Indicator Name	Core	Unit of Measure	Baseline	End Target	Frequency	Data Source/Methodology	Responsibility for Data Collection
Description: This indicator measures when the Togo Electricity Master Plan financed by the project is approved by the Government.							
Name: Sector financial plan and viability assessment completed		Yes/No	N	Y	Annual	CEET-PIU Project information	Ministry of Energy
Description: This indicator measures when the Sector financial plan and viability assessment has been completed.							
Name: Management Improvement Plan for CEET effective		Yes/No	N	Y	Annual	CEET-PIU Project information	CEET management
Description: This indicator measures when the CEET Management Improvement Plan is approved and become effective.							
Name: Project -related grievances registered under the project GRM and addressed		Percentage	0.00	100.00	Annual	Project Information	Bank team
Description: This indicator measures the ratio of coverage of all grievances registered under the project GRM.							

Target Values

Project Development Objective Indicators

Indicator Name	Baseline	YR1	YR2	YR3	YR4	YR5	End Target
People provided with new or improved electricity service	0.00	0.00	0.00	0.00	40000.00	80000.00	80000.00
People provided with access to electricity by hhold connections-Grid	0.00	0.00	0.00	0.00	40000.00	80000.00	80000.00
Women provided with new or improved electricity connection	0.00	0.00	0.00	0.00	20000.00	40000.00	40000.00
Distribution system loss reductions in areas of Lomé affected by Lomé A, Lomé B and Lomé Siege substations	24.00	24.00	24.00	23.00	22.00	20.00	20.00
System loss reductions in areas of Lomé affected by Lomé A, Lomé B and Lomé Siege substations- Technical	11.00	11.00	11.00	10.00	10.00	9.00	9.00
System loss reductions in areas of Lomé affected by Lomé A, Lomé B and Lomé Siege substations- Non-Technical	13.00	13.00	13.00	12.00	12.00	11.00	11.00
Increased collections from targeted high-consuming customers	0.00	0.00	0.00	2.00	4.00		4.00

Intermediate Results Indicators

Indicator Name	Baseline	YR1	YR2	YR3	YR4	YR5	YR6	End Target
Distribution lines constructed or rehabilitated under the project	0.00	0.00	0.00	50.00	100.00	159.00		159.00
Distribution lines constructed under the project	0.00	0.00	0.00	30.00	50.00	88.00		88.00
Distribution lines rehabilitated under the project	0.00	0.00	0.00	20.00	50.00	71.00		71.00
Distribution LV lines constructed under the project	0.00	0.00	0.00	50.00	100.00	225.00		225.00
Distribution transformer stations constructed or rehabilitated under the project	0.00	0.00	0.00	10.00	20.00	56.00		56.00
Power outages per year in substations rehabilitated by the project	33.00	33.00	33.00	30.00	20.00	10.00		10.00
New household connections	0.00	0.00	0.00	5000.00	10000.00	20000.00		20000.00
Least Cost Development Plan approved	N	N	Y					Y
Electricity Sector Master Plan approved	N	N	N	N	Y			Y

Indicator Name	Baseline	YR1	YR2	YR3	YR4	YR5	YR6	End Target
Sector financial plan and viability assessment completed	N	N	Y					Y
Management Improvement Plan for CEET effective	N	N	N	Y				Y
Project -related grievances registered under the project GRM and addressed	0.00	100.00	100.00	100.00	100.00	100.00	100.00	100.00

ANNEX 1: DETAILED PROJECT DESCRIPTION

COUNTRY: Togo
Togo Energy Sector Support and Investment Project

1. The 20 kilovolt (kV) distribution network in Lomé has a total length of 586 km, with 334 km of underground cables and 252 km of overhead lines. It includes two position sources 20 kV (Lomé A and Lomé B) as well as a 20 kV switching station (Lomé Siege). Figure 1.1 below shows a diagram of Lomé's high voltage/MV network. Substation Lomé A is directly powered by the substation Lomé Aflao 161 kV / 20 kV owned by CEB. This substation is connected to the substation Lomé B and the substation Lomé Siege by dedicated cables.

Figure 1.1: Single Line Diagram of the Lomé Distribution System

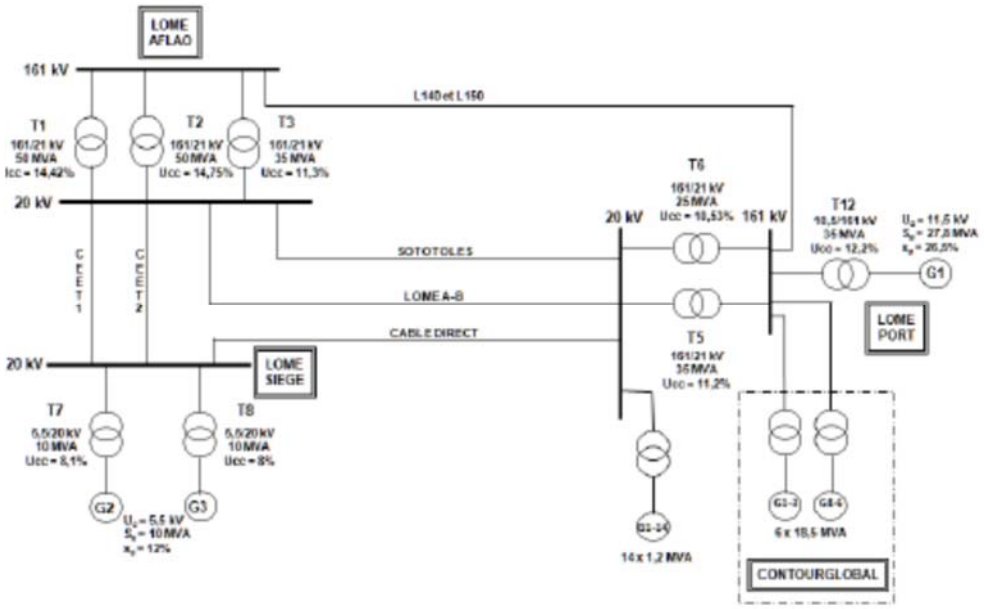

2. The substation Lomé B is directly powered by the substation Lomé Port 161 kV / 20 kV owned by CEB. This substation is connected to the substation Lomé B and Lomé Siege by dedicated cables. The substation Lomé Siege is a switching substation of 20 kV which redistributes the energy received from Lomé A and Lomé B substation and which, through a distribution station, serves the headquarters of the CEET. There are also two groups of 10 MVA each, which can charge directly on the 20 kV of Lomé network to meet demand at peak hours.

3. The extension of the MV/LV distribution network is not keeping pace with the growth of the city of Lomé. Therefore, several private initiatives for the extension of the network have been developed. The private investors become owners of portions of the network that they have funded, collect fees and, after five years, these investments are passed onto the public domain. Areas of Lomé that are not reached by the network in are often supplied by "branches of fortune" in a haphazard way following no standard. Fraudulent electricity consumption/connections are also found in these areas.

4. The proposed project intends to tackle the rehabilitation and reinforcement of power supply in Lomé and extend access in areas around Lomé; support some initial power sector reforms to begin to address the institutional situation of the sector in Togo; and support project implementation activities. The project's three components are described below.

5. **Component 1: Power Distribution Improvement and Expansion (US$27 million, of which IDA US$26 million equivalent and GoT US$1 million equivalent)**. The project will finance the rehabilitation and reinforcement of MV and LV systems in Lomé, and the expansion of the network with new connections. The design of this component has been done based on a technical study commissioned by the EU in 2016.[15] The project is composed of three subcomponents, which are founded on the results of the EU-funded prefeasibility study mentioned above, as well as a Lomé MV network modeling exercise which identified the requirements for grid strengthening by 2020. The EU study undertakes a complete analysis of Lomé distribution network and determines a list of investments in rehabilitation and reinforcement to increase the access with 40,000 new connections and reduce the technical losses within the city. The total cost of this investment list is estimated at US$75 million.

6. This project proposes a first portion of investments, estimated at US$27 million. The investments have been selected following the prioritization within the whole EU study and will also lay the grounds for further activities in the system. In parallel, the AFD is preparing a similar project that will undertake rehabilitation and reinforcement works in other areas and intends to complete the recommendations of the study. The two projects will be executed independently.

7. **Subcomponent 1.1:** Rehabilitation MV and LV system in Lomé (IDA US$15 million equivalent and GoT US$1 million equivalent). This subcomponent will include the rehabilitation of Lomé A, Lomé B, and Lomé Siege substations, the rehabilitation of around 71 km of the underground medium voltage (MV) network, the rehabilitation of around 41 MV/low voltage (LV) transformer stations, and the construction of 10 new MV/LV transformer stations.

8. The details of the investment are the following:

   (a) <u>Main substations rehabilitation</u>: Considering the condition of equipment in the two main source substations, Lomé A and Lomé B, and in the switching substation Lomé Siege, the study recommends (i) the replacement of the three breakers in Lomé A; (ii) the replacement of one breaker in Lomé B; (iii) the replacement of the two breakers in Lomé Siege; (iv) installation of two 100 Kilovolt Ampere (kVA) generators in Lomé A and Lomé B with automatic self-starting; and (v) the provision of a feeder equipped and a withdrawable circuit breaker and spare parts for each source substation and the switching substation in Lomé Siege.
   (b) <u>Rehabilitation of network 20 kV</u>: According to the study, different sections of the distribution system in Lomé were identified as in need of rehabilitation. These sections are located on existing feeders from substations 20 kV in Lomé A, Lomé B and Lomé Siege and the total length of 586 km

[15] *Facilité d'Assistance Technique.* Énergie Durable Pour Tous (SE4ALL). Afrique Occidentale et Centrale. EuropeAid/134038/C/SER/Multi · N° d'identification 2013/335152.
Togo–Diagnostic, renforcement, consolidation et extension du réseau de distribution de Lomé de la CEET, April 2016.

of existing lines. Considering these important needs, the study prioritized the sections to be rehabilitated following the below criteria:

(i) Sections that presents an absolute emergency for its compliance, should be supported immediately by the CEET budget since the implementation of the project will take some time.

(ii) The project must prioritize the most overloaded network sections relative to the conductors' transit capacity.

(iii) Prioritization follows the frequency of incidents recorded on the network and prioritize the most affected sections.

(iv) The design does not systematically act on overloaded sections. It analyses and compares also the opportunity to create new departs and connections which should unload the overloaded sections.

After analysis and verification, the replacement of all sections of 150 mm^2 HN[16] and 240 mm^2 CPI[17] by cables 240 mm^2 Alu - HN has been considered essential, for a total length of around 71 km. Rehabilitation of 20 kV overhead lines are not considered as a priority.

(c) Rehabilitation of Substations MV/LV: The study proposes the rehabilitation of MV/LV substations, including:

(i) Rehabilitation of around 41 MV/LV substations. This operation will involve partial or full electrical equipment renewal: (i) renewing cells; (ii) protection cells; (iii) low voltage distribution panels; (iv) the replacement of old transformers with nominal power ranging between 250 and 630 kVA; (v) civil repairing works in substations; and (vi) adaptation of some substations to tele control.

(ii) Replacement of around 20 MV/LV substations: These existing substations do not meet technical standards and pose a danger to residents and staff of CEET. Especially there are large openings for ventilation at a height that is accessible and subject to intrusion of any object inside the substation. These activities include the acquisition of prefabricated and metallic-cell envelope as the current substations are directly connected to the network by plug-in terminals. It will include (i) renewal of network cells and protection cells; and (ii) acquisition of prefabricated simple substations.

(iii) Creation of two hub substations MV/MV geographically located near several existing underground cables. These substations will facilitate the operation of the 20 kV network of Lomé, especially after the commissioning of the future substation Lomé C.

(iv) Construction of 10 new MV/LV transformer stations.

(v) Replacement of six substations MV/LV. The existing substation are built without respecting safety standards. They will be replaced by prefabricated posts under metal casing adapted to tele control and equipped with motorized cells and protection cells.

(d) Installation of smart meters for large consumers to reduce commercial losses and improve bill collection rate, the project will finance the purchase and installation of smart meters for large customers. These meters will support the efforts of the reinforcement of the existing Revenue Protection Program, as indicated in Component 2.

[16] Synthetic isolation.
[17] Oil-and-paper isolation.

9. **Subcomponent 1.2:** Reinforcement of the Lomé MV network (US$6 million equivalent). This subcomponent will finance the reinforcement of the MV system in Lomé. The EU study analyzed the current strengthening of the Lomé MV network, obtained by calculations of network operation at the peak of 2015 and assessing the status of that network by 2020. The study identifies possible strengthening, calculating the forecast of demand for this year target.

   (a) The evolution of the demand at the city of Lomé are extracted from the annual CEET reports (Figure 1.2). The average growth rate of the peak demand is 7.74 percent, obtained for the last five years. With respect to the percentage of Togo's electricity consumption, the demand in Lomé has not changed significantly during the past six years and is around average values of 83 percent for the peak and 84 percent for the energy demand.

Figure 1.2: Evolution of Peak Load in the City of Lomé

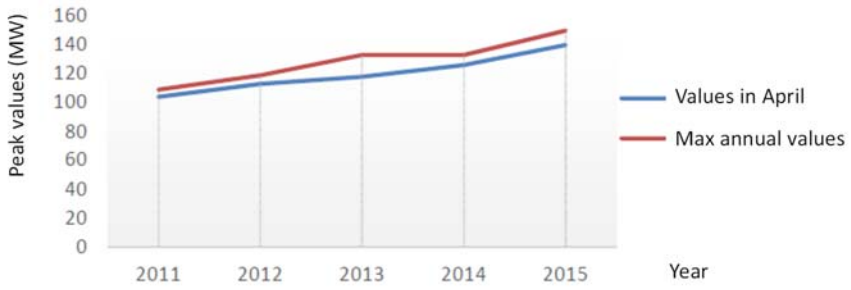

   (b) Peak demands for Lomé for years 2015 to 2020 are 150 MW and 232 MW, respectively (Figure 1.3). These values take into account additional power equal to 10 percent of the calculated point, around 21 MW, to be allocated to the substation Lomé B. The estimations were validated by the CEET, at the meeting of the Steering Committee of the CEET on December 11, 2015.

Figure 1.3. Forecast of peak load in the city of Lomé

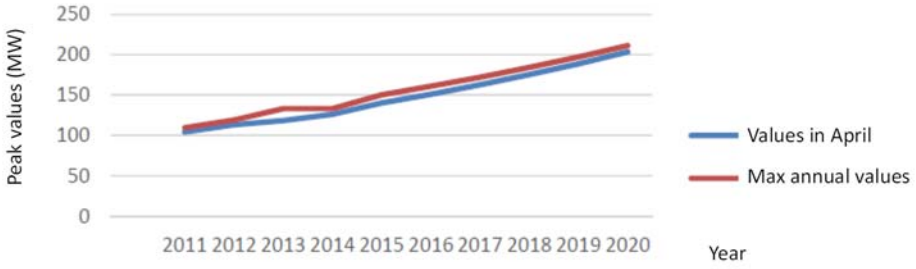

   (c) The strengthening of the distribution network needed by 2020 has been obtained following a Lomé MV network modeling. The results of the simulation for the functioning of the MV network in Lomé on the horizon 2020 led to the identification of the sections of lines to strengthen. These reinforcements increase the capacity of transit of the overloaded sections above 80 percent.

(d) The activities included in this reinforcement are intended to guarantee mutual backup power between high voltage positions sources / existing Lomé A and Lomé B with the new substation Lomé C. The subcomponent includes: (i) construction of one double circuit overhead line with a length of around 20 km between Lomé B and Lomé C; (ii) two cables of 240 mm^2 in parallel with a length of around 20 km between Lomé A and Lomé C; (iii) construction of around 39 km of underground cables and around 9 km of overhead line to remove the bottlenecks on the network and to connect the new substation Lomé C to the existing surrounding network; (iv) construction and equipment of two switching substation MV/MV adapted to tele control in order to facilitate the operation of the network; and (v) installation of three capacitor banks with a capacity of 9 MVar in order to maintain a level of acceptable voltage at the ends of the MV network.

10. **Subcomponent 1.3**: Network extension and new connections (US$5 million equivalent). This subcomponent will finance the expansion of the network in the outskirts of Lomé with 20,000 new connections. The extension will consist of the construction of around 225 km of LV lines and five MV/LV stations to connect the new customers.

11. **Component 2: Power Sector Reform (IDA US$6.6 million equivalent).** The activities envisaged in this component are (i) the reform of the CEET and its relationship with the GoT with the preparation and implementation of a MIP, as well as a review and reinforcement of the existing Revenue Protection Program targeting large customers and government electricity bill payment; (ii) planning, with the preparation of a master plan for the generation, transmission, and distribution, and the strengthening of the planning capacities of the Ministry of Energy and CEET; (iii) the preparation of a sector financial model viability study; (iv) the review of the sector legal and regulatory framework; (v) preparation of a financial model of the diagnostic study of CEB and the implementation of reforms identified; and (vi) review of the performance contract with CEET.

12. The details of the investments under this component are as follows:

(a) Support for the reform of CEET is envisaged under this component and will cover the review of its Performance Contract and the preparation and implementation of a MIP. In 2009, the GoT signed a Performance Contract with CEET which states that CEET will provide an annual report on the cost of service and, if necessary, a proposal for revising tariffs (which, latterly the GoT would review and decide upon). A new contract was signed in 2016 and the GoT expressed its intention to conduct an analysis of the Performance Contract system with a possibility to evolve to new reform arrangements for the utility to increase efficiency and revenues. The MIP will include tools to help CEET better manage itself and the sector, including new business software and equipment for commercial, financial, inventory, and human resources management activities in CEET. CEET currently has a Revenue Protection Program in place targeting selected large customers; however, the program needs to be reviewed and reinforced to cover all large customers. As part of this, a new government offices metering and billing system will be installed to improve the electricity bills budgeting process, billing processing, verification, and payment of government electricity bills. US$4.3 million is envisaged to cover these important reform activities. The reinforcement of the Revenue Protection Program will also be supported by physical investments in smart meters for large consumers.

(b) The project will support the preparation of a Least Cost Development Plan for an Electricity Sector Master Plan, which was a recommendation of the Energy Policy and Strategy document prepared by the GoT in 2011. Least Cost development plan and Electricity Sector Master Plan are common tools that are being used in most of the utilities around the world. Recent experiences in SSA (Mali, The Gambia, Nigeria, etc.) show that these tools are key to adequately plan a sustainable expansion of the sector. The objective is to build the capacity of Togo's institutions on sector planning, which will provide the country with a long-term vision for the development of the electricity supply system throughout the territory indicating the infrastructure needs in generation, transmission, and distribution. Special attention will be given to least-cost development of the generation/importation plan to ensure sufficient supply at minimum cost to meet the growing demand. The Directorate of Planning of the Ministry of Energy and CEET will receive training to enable them to update the master plan periodically. The estimated cost of the development of the least cost development plan for the Master Plan is US$0.7 million.

(c) The component will finance a sector viability assessment and sector financial model, which will propose measures to improve the financial viability of the sector. The measures must systematically consider how to increase sector revenues, for instance by improving billing collection and reducing systems losses, with measures to reduce costs, which may require a shift in the energy mix, and the optimization of utility fix costs. The viability assessment will provide recommendations on how to address the outstanding debt, as well as projections on the evolution of cost of service, which will inform Government about the trajectory of energy subsidies over time. The assessment will also consider improvements in financial viability that is expected from measures supported by this project to improve revenues from electricity sales to high-consuming customers. This will be complemented by the regional analytical work on ability to pay, distributional impact of any tariff reform, and identification of compensation measures to protect the poor and vulnerable with regards to tariff increases. The cost envisaged for the study is US$0.6 million.

(d) Support will be provided to the GoT to review the sector legal and regulatory framework. The actual Benin-Togo electricity code was amended several times to remove the single buyer provision that gives CEB the sole right to buy electricity from IPPs in the two countries. Recent amendments allow the Government of Benin and the distribution utility SBEE to sign power purchase agreement with IPPs in Nigeria. Given this evolution of the environment, it appears necessary to review the code and reform CEB. Moreover, the Togo Electricity Law needs to be reviewed and updated to include the development of renewables, energy efficiency provisions, and the establishment of a Rural Electrification Agency. The Electricity Law will also help to clarify the critical regulation aspects of the activities of ARSE, which does not currently play a true regulator role. The cost of this activity is estimated at US$1 million.

13. **Component 3: Project management and capacity building (IDA US$2.4 million equivalent).** This component will finance project supervision and implementation management activities, including operational expenses, vehicles, offices equipment, and project management capacity building.

    a. Subcomponent 3.1 Engineering consulting (US$1 million equivalent). This subcomponent will support the implementation agency in the activities included under Component 1 through the recruitment of an Owner's Engineer to assist the Implementation Agency in technical issues and in the procurement process.
    b. Subcomponent 3.2 Implementation Management activities (US$1.2 million equivalent).

This subcomponent will support various operating costs of the project management team (e.g., office equipment, project software, project vehicle, etc.) and the external project audits. The subcomponent will also support the oversight of implementation of the safeguards plans, while the GoT will pay any necessary resettlement compensation with counterpart funds under Component 1.

c. Subcomponent 3.3 Capacity building activities (US$0.2 million equivalent). This subcomponent will include staff training related to utility management and/or project implementation (e.g., procurement, FM, M&E, software systems).

ANNEX 2: IMPLEMENTATION ARRANGEMENTS

COUNTRY: Togo
Togo Energy Sector Support and Investment Project

Project Institutional and Implementation Arrangements

1. Although there are various entities involved in the project (CEET, CEB, Togo's Ministry of Energy), CEET will receive the biggest portion of the investments for distribution extension and rehabilitation. Therefore, it has been decided to concentrate all the fiduciary activities into a PIU based in CEET. This PIU will be fully staffed by CEET and technically assisted by CEB and the relevant Ministry departments in defining technical specifications and ToR for their respective activities within Component 2. A PIM will define the role of each entity under the project. Considering the inexperience of CEET staff in implementing World Bank projects, the PIU will initially be supported and trained by World Bank staff and individual consultants with expertise in the different fiduciary responsibilities.

2. A TESSIP PIU has been appointed within CEET, including the following functions: project coordinator, procurement specialist, technical specialists, FM officer, environmental and social specialist, M&E specialist, and project accountant. The PIU will receive specific training in World Bank guidelines and procurement rules.

3. The Owner's Engineer financed under Subcomponent 3.1 will provide support to the implementation of the project and to the PIU by providing support from expert staff in procurement activities to meet World Bank requirements and conducting supervision of investments under Components 1 and 2. The Owner's Engineer will also validate the technical specifications for activities under these components before procurement packages are put out for bid. However, the ultimate responsibility for project management will lie with the PIU.

4. The TESSIP will be implemented in accordance with the PIM, which will be completed by CEET before effectiveness.

5. A PSC chaired by the Minister of Energy will be established to provide advice on strategic questions related to the project implementation. The composition of the PSC was defined during appraisal. It will also include representatives from all the stakeholders, in particular from CEET, ARSE, MME and the Ministry of Economy and Finance. The role of the PSC will be of importance in the supervision of the recommendations made by the consultancy work to be performed under Component 2. The PSC shall be responsible for: (i) reviewing and approving Annual Work Plans and Budgets; (ii) monitoring project's progress towards achieving its objective and key indicators; (iii) ensuring inter-ministerial coordination as required for project implementation; and (iv) providing recommendations to help resolve any difficulties that the project may face during implementation.

6. The PSC shall meet at least annually and shall be responsible for project oversight.

Financial Management

7. An FM assessment of the PIU of CEET designated to manage the project was carried out in March 2017. The objective of the assessment was to determine whether the PIU has acceptable FM arrangements in place to ensure that the project funds will be used only for intended purposes, with due attention to consideration of economy and efficiency. The FM assessment was carried out in accordance with the Financial Management Practices Manual issued by the Financial Management Board on March 1, 2010.

8. The FM arrangements are acceptable if they are capable of recording accurately all transactions and balances, supporting the preparation of regular and reliable financial statements, safeguarding the project's assets, and are subject to auditing arrangements acceptable to the World Bank. These arrangements should be in place when project implementation starts and be maintained as such during project implementation. The assessment concluded that the FM of the PCU satisfies the World Bank's minimum requirements under World Bank IPF Directive and Policy, and therefore is adequate to provide, with reasonable assurance, accurate and timely FM information on the status of the project required by the World Bank.

9. Overall, the residual FM risk for the project is rated as substantial. It is however considered that the FM will satisfy the World Bank's minimum requirements under World Bank IPF Directive and Policy once the mitigation measures mentioned in the FM action plan below have been implemented.

Table 2.1: Financial Management Action Plan

No.	Activity/Action	Target Completion	Responsibility
1	Recruit a short term qualified and experienced FM Expert.	Within three months after effectiveness.	CEET
2	Dedicate one accountant to the accounting and disbursements tasks of the proposed project (part of the PIU team).	Effectiveness condition	CEET
3	Develop a comprehensive Financial and Accounting manual of procedures, as part of the PIM.	Effectiveness condition	CEET
4	Purchase an adequate accounting software.	Not later than three (3) months after effectiveness	CEET
5	Appoint an independent external auditor based on acceptable ToR.	Not later than six (6) months after effectiveness	CEET
6	Revise Internal Audit Unit's work program to cover the new project's internal auditing on the basis of bi-annual internal audits missions under ToR satisfactory to the World Bank; the related risk-based internal audit reports shall be furnished to the Association not later than forty-five (45) days after the end of each-audited period.	Not later than three (3) months after effectiveness	CEET

Country issues

10. The 2016 Public Expenditure and Financial Accountability Assessment (PEFA) assessment revealed the following main weaknesses in Togo's public FM system: (i) poor budget credibility, particularly concerning expenditures; (ii) budgetary coverage and transparency is limited by the high level of off-budget operations

(over 10 percent of total expenditures); (iii) budgeting experience based on public policies still needs to be improved; and (iv) predictability and supervision of budget execution is still limited. The capacities of the State internal audit entities are still generally weak, given the scope of their missions and their areas of responsibility. The accounting and recording of financial data was reorganized in 2009 but the system still requires improvement. The independence of the supreme audit institution (Cour des Comptes) is hindered by jurisdictional limitations in the Constitution and the lack of freedom to publish an annual report.

11. The Overall Inherent Risk of the public financial management (PFM) system in Togo is rated as “high”. However, actions are being taken to address all these issues. The GoT is updating the PFM actions plan based on recommendations resulting from various recent studies as the Public Expenditure Management and Financial Accountability Review (PEMFAR), and the Poverty and Inequality Measurement and Analysis (PIMA) to address the main weaknesses inherent to the country PFM system.

Financial Management and Disbursements arrangements

12. CEET will be responsible for coordinating the day-to-day implementation of the project, including FM, organizational aspects and M&E. It will be responsible for the management of the project funds for the technical activities it implements, as well as those implemented by Togo’s MME, as well as CEB. These include budgeting, disbursement, FM, reporting, supervision, management of the Designated Account (DA), and auditing.

Budgeting

13. The project budgeting process will be clearly defined in the PIM and the budget will be reviewed and adopted by the PSC before the beginning of the year. Annual budgets will be submitted for the World Bank’s non-objection before adoption and implementation. The budget will include all planned project activities for the year. Each entity will prepare its budget under the supervision of the PCU which financial management specialist (FMS) is in charge of all budget consolidation. The project’s consolidated budget will be submitted for IDA's no objection.

Funds Flow and Disbursement Arrangements.

14. Flow of Funds (See the illustration below)

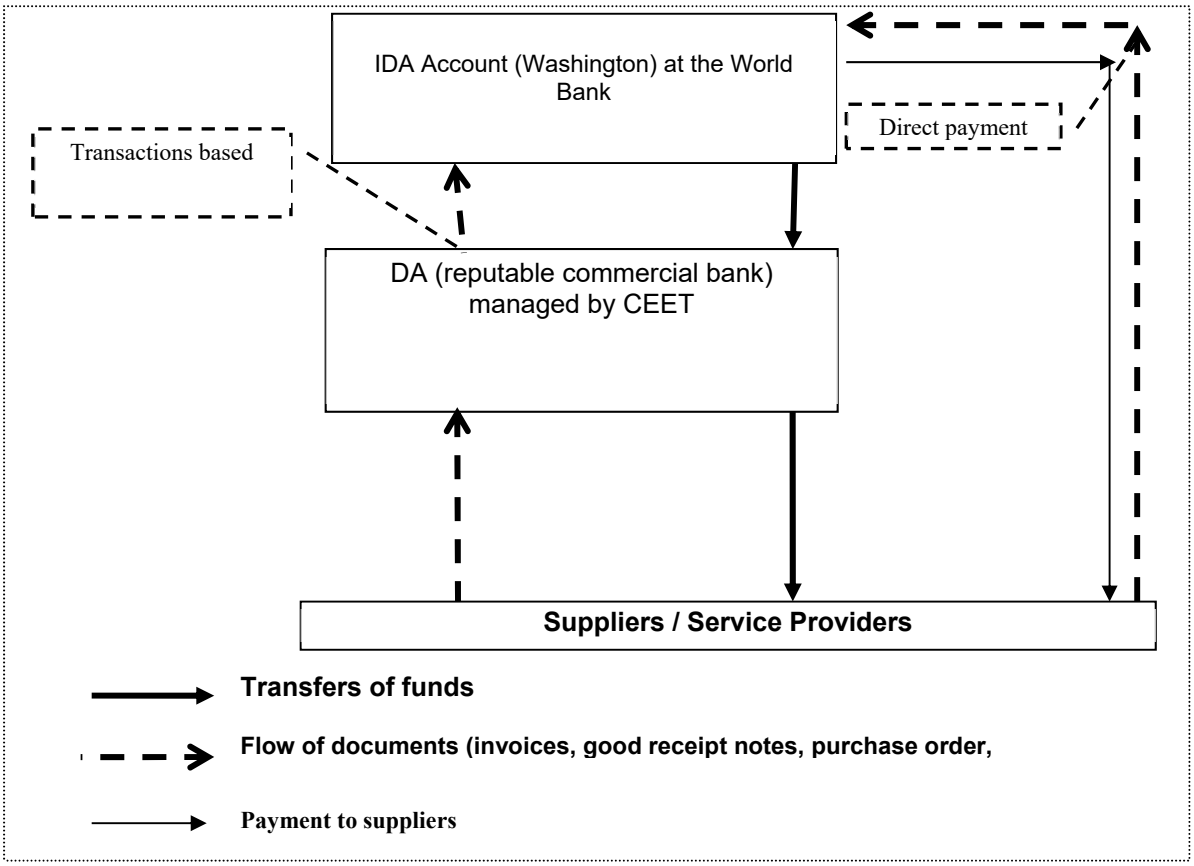

DA

15. One DA will be opened at a commercial bank acceptable to IDA. Its ceiling will be determined in the disbursement letter based on the disbursement forecast for the first four months. The project coordinator and the FM specialist will be the signatories of the DA. The account is set up to fund eligible expenditures based on the approved annual activity plans.

Annual Work Plans and Budgets.

16. Not later than November 30 in each calendar year (or one month after the effective date for the first year of project implementation), the Recipient shall prepare a draft annual work plan and budget for the Project activities proposed for inclusion in the project for the subsequent calendar year of project implementation, of such scope and detail as the Association shall have reasonably requested.

17. The Recipient shall furnish such draft annual work plan and budget to the Association and afford the Association a reasonable opportunity to review such draft annual work plan and budget, and thereafter shall carry out such annual work plan and budget during such subsequent calendar year as shall have been approved by the PSC ("Annual Work Plan and Budget"). Only those activities that are included in an Annual Work Plan and Budget shall be eligible for financing out of the proceeds of the Financing.

18. For any training proposed to be included in an Annual Work Plan and Budget, the Recipient shall identify:

(a) particulars of the training envisaged; (b) the personnel to be trained; (c) the selection method of the institution or individuals conducting such training; (d) the institution conducting such training if identified; (e) the purpose and justification for such training; (f) the location and duration of the proposed training; and (g) the estimate of the cost of such training.

19. Annual Work Plans and Budgets may be revised as needed during project implementation subject to the Association's prior written approval.

Disbursement methods and processes

20. Disbursements under the project will be transaction-based. In addition to making advances to the DA, other disbursement methods (reimbursement, direct payment and special commitment) will be available for use under the project. Further instructions on the withdrawal of proceeds will be outlined in the disbursement letter and details on the operations of the Withdrawal Applications and Direct Payments will be outlined in the disbursement letter.

21. Table below specifies the categories of eligible expenditures to be financed out of the proceeds of the credit, the amounts under each category, and the percentage of expenditures to be financed for eligible expenditures in each category.

Table 2.2: Disbursement Methods and Processes

Category	Amount of the financing allocated (expressed in EUR)	Percentage of expenditures to be financed (exclusive of taxes)
Goods, works, non-consulting services, consulting services, training and operating costs for the project	30,100,000	100%
TOTAL AMOUNT		

22. **Accounting and Reporting**. SYSCOHADA is the assigned accounting system in West African Francophone countries. Project accounts will be maintained on a cash basis, supported with appropriate records and procedures to track commitments and to safeguard assets. Annual financial statements will be prepared by the PCU in accordance with the SYSCOHADA but taking into accounting specificities related to external financed investment projects. Accounting and control procedures will be documented in the FM Manual. The PCU will prepare Quarterly Interim Un-audited Financial Reports (IFRs) reflecting operations of the DA and submitted to the World Bank within 45 days after the end of each quarter. The IFR format was discussed during project negotiation, and will comprise the following: i) report on the sources and use of funds cumulative (project-to-date; year-to-date) and for the period, showing budgeted amounts versus actual expenditures, including a variance analysis; and ii) forecast of sources and uses of funds. Within the three months after effectiveness, the PCU shall purchase an adequate accounting software with multi-projects, multi-sites, and multi-donors features for managing the new project.

23. **Internal control and internal auditing arrangements**. The PIM will document the FM and disbursement

arrangements including internal controls, budget process, assets safeguards, and clarify roles and responsibilities of all the stakeholders. The Internal Audit Unit of CEET will implement a bi-annual review of the internal control system of the project with special attention to operations costs, including per diems and other soft expenditures, to ensure they are used in an economical manner and for the purposes intended. The work-program of the Internal Audit Unit will be revised to cover the new project's internal auditing on the basis of semi-annual internal audits missions under ToR satisfactory to the Association; the related risk-based internal audit reports shall be furnished to the Association not later than forty-five (45) days after the end of each-audited period. In line with the Togo Use of Country System (UCS) Report, the project's internal control system could be strengthened by establishing a close collaboration between General Finance Inspection (*Inspection Générale des Finances* - IGF) and the project's internal audit unit for conducting periodical internal audit review on the project activities.

24. **Annual Financial Audit**. An external independent and qualified private sector auditor will be recruited to carry out the audit of the project's financial statements under the supervision of the supreme audit institution. Therefore, annual audits will be conducted based on ToRs agreed with the supreme audit institution and that are satisfactory to the World Bank. The auditor will express an opinion on the Annual Financial Statements, and perform the audit in compliance with International Standards on Auditing (ISAs). The auditor will be required to prepare a Management Letter detailing observations and comments, providing recommendations for improvements in the accounting system and the internal control environment. The external auditor will especially review each year a reasonable sample of the subsidized concession operations to ensure that activities were completed pursuant to the agreed procedures and that funds were used for the purposes intended.

25. The audit report on the annual project financial statements and activities of the DA will be submitted to the IDA within six months after the end of each project fiscal year.

Implementation Support Plan

26. Based on the outcome of the FM risk assessment, the following implementation support plan is proposed. The objective of the implementation support plan is to ensure the project maintains a satisfactory FM system throughout the project's life.

Table 2.3: Implementation support plan

FM Activity	Frequency
Desk reviews	
Interim financial reports review	Quarterly
Audit report review of the project	Annually
Review of other relevant information such as interim internal control systems reports.	Continuous as they become available
On site visits	
Review of overall operation of the FM system	Twice per year (Implementation Support Mission)
Monitoring of actions taken on issues highlighted in audit reports, auditors' management letters, internal audit and other reports	As needed
Transaction reviews (if needed)	As needed
Capacity building support	
FM training sessions	During implementation and as and when needed.

Procurement

27. A PIU has been created and based in CEET. This PIU will be fully staffed by CEET employees and technically assisted by CEB and the relevant Ministry departments in defining technical specifications and ToR for their respective activities within Component 2. This PIU is staffed by a designated staff who will be responsible of procurement activities. This agent has experience in procurement of projects financed by CEET, but he is not skilled with the World Bank's procurement procedures that will be applied to the project implementation. The designated person will work closely with the procurement consultant who will be recruited for one year.

28. The CEET has established a Procurement Commission consisting of five members and chaired by the nominated person in charge of Procurement. The person in charge of Procurement has a Secretary, who serves as a secretary to the Commission. The documents (BD, RfP, BER) conjointly elaborated by the procurement commission and the PCU are submitted for decisions of the procurement control commission of CEET consisting also of five members or to the decisions of the National Procurement Control Directorate (*Direction Nationale de Controle des Marchés Publics*) under the Ministry of Economy and Finance depending on the competency of the procurement control threshold.

29. *Filing and record keeping*: The Procurement Procedures Manual, part of the PIM, will set out the detailed procedures for maintaining and providing readily available access to project procurement records, in compliance with the Loan Agreement. The Implementing Agency will assign one person responsible for maintaining the records. The logbook of the contracts with unique numbering system shall be maintained.

30. The signed contracts as in the logbook shall be reflected in the commitment control system of the Borrower's accounting system or books of accounts as commitments whose payments should be updated with reference made to the payment voucher. This will put in place a complete record system whereby the contracts and related payments can be corroborated.

31. *Project Procurement Strategy for Development*: part of the preparation of the project, the Borrower (with support from the World Bank) has prepared his PPSD which describes how fit-for-purpose procurement activities will support project operations for the achievement of project development objectives and deliver Value for Money. The procurement strategy is linked to the project implementation strategy at the country level ensuring proper sequencing of the activities. They consider institutional arrangements for procurement; roles and responsibilities; thresholds, procurement methods, and prior review, and the requirements for carrying out procurement. They also include a detailed assessment and description of state government capacity for carrying out procurement and managing contract implementation, within an acceptable governance structure and accountability framework. Other issues considered include the behaviors, trends and capabilities of the market (i.e. Market Analysis) to inform the procurement plan. The activities also require strong technical capability to prepare proper technical specifications to avert lack of, or inadequate, market response. This capability – or a plan to enhance is considered in the strategies. Also, special arrangements like direct contracting, Force Account, or civil servants needs, results based arrangements, need for prequalification, if any, are addressed. The strategy includes a summary on: Procurement Risk, Mitigation Action Plan, Procurement Implementation Support and Supervision plan. Procurement Risk Rating.

32. *Procurement Plan:* The Borrower and CEET is prepared a detailed 18-month procurement plan which was agreed by the Government and the World Bank during the loan negotiation. The Procurement Plan will be updated in agreement with the World Bank Team annually or as required to reflect the actual project implementation needs and improvements in institutional capacity.

33. Works to be procured under the project include contracts for rehabilitation, upgrade and extension of distribution system, etc.

34. Goods and non-consulting services to be procured under this project will include contracts for: supply and installation of transmission line, supply and installation of substations, installation of the protection equipment;

35. The consulting services under this project will include: contracts of supervision of construction lines, implementation of RAP and ESMP response, master plan, tariff study etc.

36. *Training, workshops, study tours, and conferences:* Workshops, seminars and conferences, training activities would comprise workshops and training, based on individual needs, as well as group requirements, on-the-job training, and hiring consultants for developing training materials and conducting training. Selection of consultants for training services follows the requirements for selection of consultants above. All training and workshop activities (other than consulting services) would be carried out on the basis of approved Annual Work Plans / Training Plans that would identify the general framework of training activities for the year, including: (i) the type of training or workshop; (ii) the personnel to be trained; (iii) the institutions

which would conduct the training and reason for selection of this particular institution; (iv) the justification for the training, how it would lead to effective performance and implementation of the project and or sector; (v) the duration of the proposed training; and (vi) the cost estimate of the training. Report by the trainee(s), including completion certificate/diploma upon completion of training, shall be provided to the Project Coordinator and will be kept as parts of the records, and will be shared with the World Bank if required.

37. A detailed training and workshops' plan giving nature of training/workshop, number of trainees/participants, duration, staff months, timing and estimated cost will be submitted to IDA for review and approval prior to initiating the process. The selection methods will derive from the activity requirement, schedule and circumstance. After the training, the beneficiaries will be requested to submit a brief report indicating what skill have been acquired and how these skills will contribute to enhance their performance and contribute to the attainment of the project objective.

38. *Operational costs:* Operational costs financed by the project would be incremental expenses, including office supplies, vehicles operation and maintenance cost, maintenance of equipment, communication costs, rental expenses, utilities expenses, consumables, transport and accommodation, per diem, supervision costs, and salaries of locally contracted support staff. Such services' needs will be procured using the procurement procedures specified in the PIM accepted and approved by the World Bank.

39. *Procurement manual:* Procurement arrangements, roles and responsibilities, methods and requirements for carrying out procurement shall be elaborated in detail in the Procurement Manual which will be a section of the PIM. The PIM shall be prepared by the Borrowers and agreed with the World Bank as Project effectiveness condition.

40. *Procurement methods*: The Borrower will use the procurement methods and market approach in accordance with the Procurement Regulations.

41. Open National Market Approach is a competitive bidding procedure normally used for public procurement in the country of the Borrower and may be used to procure goods, works, or non-consultant services provided it meet the requirements of paragraphs 5.3 to 5.6 of the Procurement Regulations.

42. The thresholds for particular market approaches and procurement methods are indicated in the below table. The thresholds for the World Bank's prior review requirements are also provided in the table 2.4 below:

Table 2.4: Thresholds*, Procurement Methods, and Prior Review

Note: The thresholds are for all countries unless indicated otherwise for specific items.

No	Expenditure Category	Contract (C) Value Threshold* [eq. US$]	Procurement Method	Contracts Subject to Prior Review /[eq. US$]
1	Works	C ≥ 5,000,000	Open Competition International Market Approach and Direct Contracting	≥ 10,000,000 All contracts at or above US$5 million are subject to international advertising and the use of the bidding documents agreed with the World Bank.
		200,000 < C < 5,000,000	Open Competition National Market Approach	None
		C ≤ 200,000	RfQ	None
2	Goods, IT and non-consulting services	C ≥ 500,000	Open Competition International Market Approach and Direct Contracting	≥ 2,000,000 All contracts at or above US$500 000 are subject to international advertising and the use of the bidding documents agreed with the World Bank.
		100,000 < C < 500,000	Open Competition National Market Approach	None
		C ≤ 100,000	RfQ	None
3	National shortlist for selection of consultant firms	C < 100,000	for Consulting Services	None
		C ≤ 200,000	For Engineering and Construction Supervision	None
4	International shortlist for selection of consultant firms	C ≥ 100,000	for Consulting Services	≥ 1,000,000
		C > 200,000	for Engineering and Construction Supervision	≥ 1,000,000
5	Selection of Individual consultants	All Values	All Approaches	≥ 300,000
6	Direct contracting	All Values		As agreed in the Procurement Plan
7	Training, Workshops, Study Tours	All Values	Based on approved Annual Work Plan & Budgets (AWPB)	

*These thresholds are for the purposes of the initial procurement plan for the first 18 months. The thresholds will be revised periodically based on re-assessment of risks. All contracts not subject to prior review will be post-reviewed. (Except de TORs and CVs for safeguards studies are subject of prior review).

43. Procurement Risk Rating: The project procurement risk prior to the mitigation measures is "substantial". The risk can be reduced to a residual rating of "moderate" upon consideration of successful implementation of the mitigation measures.

44. The risks and mitigation measures are provided in the table below.

Table 2.5: Procurement Risk Assessment and Mitigation Action Plan

Procurement Risk	Mitigation measure	Responsibility and Deadline	Risk level Initial/residual
		substantial/moderate	
Togo			
Ministry of Energy			
Weak capacity of the designated agent in IDA procurement procedure	Recruit procurement consultant for one year	CEET Within 3 Months after signing of the Financing Agreement	Moderate
The procurement procedures of the current project will be reflected in the existing manual	Amend the existing manual in order to introduce procurement arrangement planned for this project	CEET Effectiveness condition	Moderate
Weak capacity of the procurement specialist, the procurement commission, the procurement control commission, the National procurement control directorate in NPF procedures	Capacity building will be provided by the World Bank on NPF procurement.	CEET and WB During project implementation	Substantial

Environmental and Social (including safeguards)

45. The planned project will finance physical infrastructure investments and triggers OP/BP 4.01 on Environmental Assessment and OP/BP 4.11 on Physical Cultural Resources. It will likely entail site-specific and largely reversible environmental impacts. For this reason, the project was rated as Environment Category "B".

46. The objectives of the project are in line with the Togolese State guidelines set out in various policy documents and strategies for economic and social development, including the Accelerated Growth and Employment Promotion Strategy (SCAPE 2013-2017); the Act No. 2007-011 on decentralization and local freedoms; and The National Sustainable Development Strategy (SNDD). The country also has various

environmental strategies and policies in relation to which the project has to abide by: the National Environmental Action Plan (NEAP); The National Program of Action to Combat Desertification (PAN / LCD); Strategy and action plan for biodiversity conservation; The National Adaptation Plan for Climate Change (NAPA); The National Forestry Action Plan (NFAP), etc.

47. At the legislative and regulatory level, several texts deal with environmental and social aspects, notably management of the living environment, pollution and nuisances, natural resources (fauna, flora, and water), ESIA procedure, and land tenure. The project must be in compliance with the provisions of these texts.

48. At the institutional level, environmental policy is conducted by the Ministry of Environment and Forest Resources (notably the National Agency for Environmental Management: ANGE in French). Other actors involved in the environmental and social management of the project are: The Project Coordination Unit, the CEET, local authorities, etc. In light of environmental and social requirements in electrical projects, it is necessary to improve environmental and social management through a comprehensive capacity building program for the main partners in the sector.

49. The World Bank's environmental and social safeguard policies applicable are: OP 4.01 "Environmental Assessment"; OP 4.11 Physical Cultural Resources; and OP 4.12 "Involuntary Resettlement".

50. The main positive impacts are: Increase of socio-economic activities, improvement of living conditions and comfort of local populations, development of public lighting and improvement of security conditions; reduction in the use of diesel when generating energy by generators during power outages, reduction of GHG emissions, reduction of noise nuisance, increase in the duration of supply of electricity, better preservation of pharmaceutical and food products, improving the level of household incomes and the creation of income-generating activities, and improved literacy rate.

51. The sources of negative impacts are mainly related to (i) the rehabilitation of source substations, the 20 kV MV network and MV / LV substations; (ii) the reinforcement of the underground network and the construction of two reflection substations in Lomé; and (iii) the extension of the MV / LV network in the peripheral areas of Lomé with the connection of 20,000 subscribers. In the works phase, these activities may require land requirements for installation, which may lead to expropriation. The construction of power lines can imply the cutting of trees and other alignment plantations on the road. During construction work, there is also the risk of accidents and the risks of pollution. At the social level, risks relate to the expropriation and loss of socio-economic activities. In the operational phase, the potential impacts are linked to the risks of pollution, accidents at work, the management of waste generated, and safety considerations.

52. For the most part, significant negative impacts could be avoided or greatly reduced with the application of (i) types of suitable mitigation measures; (ii) environmental and social clauses relating to safety, hygiene, management of solid and liquid waste during construction and operation; and (iii) compensation in case of expropriation.

Environmental and Social Management Plan (ESMP)

53. The ESMF has provisions for developing the ESMP, including an environmental and social screening procedure and institutional responsibilities for the preparation, approval and implementation of the activities of the project, considering the requirements of safeguard policies of the World Bank and national environmental legislation.

54. Depending on the results of sub-project screening and rating, some activities of the project could be subjected to an ESIA before any start-up or a RAP in the event of involuntary displacement (relocation of persons, loss of property, etc.). These environmental and social studies will determine more precisely the nature of the measures to be applied for each sub-project. If there is no need for such studies, simple measures can be applied as indicated in the ESMF. Environmental and social clauses to be included in tender and works files are presented in Annex 5 of this ESMF. The General Guidelines on the Environment, Health and Safety of April 2007 of the World Bank are also applicable.

55. In addition, the ESMF has identified the following measures to better take into account the environment in the project: Recruitment of Environment and Social Experts; ESIA, including their implementation; Environmental and social audits of existing substations which will be rehabilitated; Development of a maintenance manual, good practices and safety standards; Measures to reforest the degraded vegetation cover during construction; Environmental and social monitoring; Evaluation (mid-term and final) of the ESMF. The total cost of the ESMF measures is estimated at FCFA 220,000,000.

56. To better optimize the management of the environmental and social aspects of the project, a detailed monitoring program and recommendations on institutional arrangements have been proposed in the ESMP. Thus, monitoring will be carried out by independent environmental experts or environmental consultants; the "internal" monitoring (or supervision) will be carried out by the environmental expert of the project; the "external" (inspection) monitoring will be carried out by ANGE. The mid-term and final evaluation by independent consultants. It will also have internal environmental and social audit missions to be carried out by the environmental expert of the project and external audits of the implementation of safeguard measures by independent environmental experts.

Table 2.6: Procedure for Environmental and Social selection and Project Implementation

Steps	Responsible
Step 1: Environmental and social screening and classification of sub-projects	Environment and social Experts (ESE) of the TESSIP
Step 2: Validation of the environmental and social classification of subproject	ANGE
Step 3: Performing Environmental and Social Work	
3.1. Application of simple mitigation measures	ESE of companies in charge of fieldwork
3.2. Implementation of ESIA	Independent Environmental Expert
Step 4: Review and Approval	ANGE/World Bank
Step 5: Disclosure	UC/ TESSIP /World Bank

Steps	Responsible
Step 6: Integration of environmental and social measures into bids	Independent Environmental experts; ESE of the TESSIP
Step 7: Implementation of environment and social measures	Environment and social experts of contractors in charge of project activities implementation
Step 8: Environmental Monitoring, Supervision-Evaluation-Audits	Surveillance: Independent Environmental experts internal monitoring: ESE/ TESSIP external monitoring: ANGE Supervision: World Bank Evaluation: Independent Consultants Audits: - internal: EES TESSIP - External: Independent Consultants

57. The institutional framework for the implementation of the ESMF essentially includes the following:
    a. The PSC: The PSC will monitor the registry and budgeting of the environmental and social due diligence from the Work Plan and Annual Budget (WPAB);
    b. The PIU: The specialist of the PIU guarantees the effective consideration of environmental and social issues within the implementation of Project activities;
    c. The National Agency for Environmental Management (NAEM – "ANGE" in French): The ANGE will proceed with the examination and approval of the environmental classification of sub-projects, as well as the approval of ESIAs. It will also provide external monitoring;
    d. Decentralized Technical Services (DTS or «STD» in French) of the Environment Ministry, and MME are responsible for and will be associated with all of the activities implemented in their respective field of action during and after the project;
    e. Municipalities: They will participate in environmental and social monitoring through their municipal technical services;
    f. Construction companies/Small and Medium enterprises: They will be responsible for the implementation of the ESMF and the drafting of implementation reports of the ESMF through their Environmental Expert;
    g. Environment Consulting firm/individual consulting: They will be responsible for the day-to-day monitoring of the implementation of the ESMF and the drafting of an environmental and social monitoring report to submit to the PIU;

h. Non-governmental Organizations (NGOs): In addition to social mobilization, they will participate in the awareness building among the populations concerned and the monitoring of the implementation of the ESMF by means of inquiries of the principal actors of the project.

Table 2.7: Matrix of Roles and Responsibilities (with regard to the institutional arrangements of the ESMF implementation)

No	Stage / Activities	Responsible person	Supporting Role / Collaboration	Service Provider
1.	Identification of the locale / site and principal technical characteristics of the sub-project	Technical head of the activity	CEET DTS Municipal government	TESSIP
2.	Environmental selection (screening-filling out of forms) and determination of the type of specific safeguard instrument (ESIA, RAP, environmental and social audit, social audit, etc.)	Environmental & Social Experts of the TESSIP	CEET DTS Municipal government ANGE	Environmental & Social Experts of the TESSIP
3.	Approval of the categorization by the entity responsible of the environmental impact assessments and the World Bank	TESSIP coordinator	Environmental & Social Experts of the TESSIP	ANGE World Bank
4.	Preparation of the specific environmental and social safeguard instrument of the sub-project			
	Preparation and approval of the ToR	Environmental & Social Experts of the TESSIP	Technical head of the activity	ANGE World Bank
	Completion of the study and related public consultation		Procurement specialist ANGE; Municipal government	Consultants
	Validation of the document and obtaining the environmental certificate		Procurement specialist Municipal government	ANGE World Bank
	disclosure of the document		TESSIP Coordinator	Media; World Bank
5.	(i) Integration of the environmental and social clauses in the bidding	Technical head of the activity	M&E Specialist (M&E S)	Environmental & Social Experts of the TESSIP

No	Stage / Activities	Responsible person	Supporting Role / Collaboration	Service Provider
	documents of the sub-project; (ii) approval of the ESMF-construction site		Procurement specialist	
6.	Implementation of the environmental and social clauses	Environmental & Social Specialists	Procurement specialist Technical head FMS Municipal government	Contractor companies Small and Medium Enterprises Consultants NGO Others
7.	Internal monitoring of the implementation of environmental and social measures	Environmental & Social Experts of the TESSIP	M&E Specialist STD Municipal government	Municipal government Owner's Engineer
	Dissemination of the internal monitoring report	TESSIP Coordinator	Environmental & Social Experts of the TESSIP	Environmental & Social Experts of the TESSIP
	External monitoring of the implementation of environmental and social measures.	ANGE	Environmental & Social Experts of the TESSIP	TESSIP DTS Municipal government NGO
8.	Social and environmental monitoring	Environmental & Social Experts of the P TESSIP	Social and environmental specialists	Laboratories/specialized centers NGO
9.	Capacity strengthening of actors for social and environmental implementation	Environmental & Social Experts of the TESSIP	Other social and environmental specialists Procurement specialist	Consultants Competent public structures
11.	Audit of the implementation of social and environmental measures	Independent Environmental & Social Experts	Other social and environmental specialists Procurement specialist Monitoring Specialist Municipal government	Consultants

Monitoring and Evaluation

58. Data for monitoring project outcomes and results indicators (see Section VII) will be generated by the implementing agency (CEET)—with support from the Owner's Engineer. Updates on progress on results indicators will be reported through regular progress reports. The PIU will include an M&E specialist to track the indicators. The main indicators are aligned with key specific parameters of the sector that are generated and monitored periodically. The implementing agency has developed a specific methodology in order to systematically measure the respective parameters.

59. The Owner's Engineer, recruited under Subcomponent 3.1, will also provide inputs on technical, financial, and commercial aspects to complement the monitoring of the project outcomes.

Role of Partners (if applicable)

60. The project is being prepared in parallel with an International Finance Corporation (IFC) operation to increase the generation capacity of the existing IPP. The project will strengthen the institutional performance and improve the financial viability of the sector by supporting the improvement of the performances of the utility. A PPIAF TF support is envisaged to provide transaction advisory services to the Government for the negotiation to increase the generation capacity of the IPP. A parallel joint AFD/EU project is also under preparation to increase the access to electricity subsequent to the strengthening of the network under this project. A distribution SCADA system will be develop under the AFD/EU project to improve the management of the distribution network. Rural electrification activities are under preparation by the GIZ with a special focus on the off-grid and mini-grids. For the remaining investments in the sector (both urban and rural), an electrification prospectus is under preparation to seek support from the donor's.

ANNEX 3: IMPLEMENTATION SUPPORT PLAN

COUNTRY: Togo
Togo Energy Sector Support and Investment Project

Strategy and Approach for Implementation Support

1. The implementation support plan includes periodic missions with regular client interaction from both field and headquarters based World Bank staff in between mission. During project supervision, the team will use the PDO and the Section VII results framework as primary lenses for monitoring progress, evaluating impact and effectiveness, and adjusting the project activities.

Implementation Support Plan and Resource Requirements

2. Implementation support will initially focus on advancing the preparation and implementation of the investment activities, CEET's improvement plans and power sector reforms. Thus, the World Bank expects an intensive supervision agenda during the first two years, after which the tempo should moderate, focusing on maintaining progress and addressing key bottlenecks. The World Bank team will include headquarters and country office-based staff, as well as consultants.

Procurement aspects

3. World Bank procurement specialists will regularly participate in implementation support missions to assist in monitoring procurement procedures and plans. The procurement plan indicates contracts which are subject to prior review. All other contracts will be subject to post-review. During the early phase of the project implementation, more frequent supervision is envisaged to ensure that procurement guidelines are followed. Field supervision will be conducted whenever practical. Procurement plans will be updated at least once each year (or more often as required to reflect the actual project implementation needs) and post-procurement reviews will be carried out at a minimum once annually.

FM aspects

4. FM supervision will start by assessing the progress of the project management unit staffing and reviewing the plan in place to execute disbursements following FM guidance. This supervision will take place before contracts are awarded in case improvement measures need to take place before disbursement. The FM supervision will also review quarterly progress and financial audits. In terms of resources, a country-office-based staff for eight weeks is expected to be required. Based on the outcome of the FM risk assessment, the following implementation support plan is proposed. The objective of the implementation support plan is to ensure the project maintains a satisfactory FM system throughout the project's life.

Table 3.1: Reporting

FM Activity	Frequency
Desk reviews	
Interim financial reports review	Quarterly
Internal audit report review of the Project	On a risk based approach
External Audit report review of the project	Annually
Review of other relevant information such as interim internal control systems reports.	Continuous as they become available
On site visits	
Review of overall operation of the FM system	Semi-annual (Implementation Support Mission)
Monitoring of actions taken on issues highlighted in audit reports, auditors' management letters, internal audit and other reports	As needed
Transaction reviews (if needed)	As needed
Capacity building support	
FM training sessions	During implementation and as and when needed.

Environment and social aspects

5. Environment safeguards support will include visits to project areas and the monitoring of mitigation measures. During construction, monitoring is necessary to ensure compliance with environmental and social safeguards related to the infrastructure projects, including attention to gender differences and impacts.

Overall implementation support plan

6. The overall implementation support plan would be as following:

Time	***Focus***	***Skills Needed***	***Resource Estimate***
First twelve months	*o Establish working arrangements (PIU, CEET, CEB, DGE, etc.)* *o capacity building (safeguard, FM, Procurement)* *o Finalize investments design, ToRs and bidding docs* *o Procurement* *o Safeguard assessments and implementation*	*o Task Management* *o Power Engineer* *o Safeguards* *o FM* *o Procurement*	*US$200,000*
12-48 months	*o Technical implementation support* *o Social and environmental safeguard implementation support* *o Gender mainstreaming activities support* *o M&E implementation support* *o FM & procurement implementation support*	*Specialists in* *o Energy* *o Power* *o Social* *o Environment* *o Gender* *o M&E* *o FM* *o Procurement*	*US$800,000*

7. The skills mix expected is presented below.

Skills Needed	***Annual Number of Staff Weeks***	***Annual Number of International Trips***	***Comments***
Sr. Energy Specialist /Power Engineer (Task Team Leader)	*10*	*0*	*Field Based*
Energy Specialist	*10*	*3*	*International*
Procurement	*4*	*0*	*Field Based*
Social	*4*	*0*	*Field Based*
Environmental	*4*	*0*	*Field Based*
Gender	*2*	*1*	*International*
FM	*3*	*0*	*Field Based*
M&E	*3*	*1*	*Field Based*

ANNEX 4: ECONOMIC AND FINANCIAL ANALYSIS

COUNTRY: Togo
Togo Energy Sector Support and Investment Project

I. Summary characteristics of the project

1. The project would produce economic benefits to new electricity customers through the provision of new service. This service would be made available through the proposed investments in distribution infrastructure, accompanied in some instance by transmission investments. These investments would be financed through the national utility company; CEET.

2. A Cost and Benefits Analysis approach was used for the economic analysis. Investment costs were derived from estimates provided by CEET. The analysis accounted for factors such as the technical and commercial losses reduction, demand increase due to growth in customer base as well as demand increases per customer, cost of distribution network expansion, connection, and prepayment meter fees, etc. Benefits to households include the displacement of alternatives such as kerosene and batteries, as well as improvements in economic opportunities and quality of life. However, data to assess these benefits is scarce and unreliable. Instead, it is conservatively assumed that the benefits derived from consumption of a unit of electricity are in monetary terms equal to the electric tariff rate.

3. The projects will involve rehabilitation of existing transmission line infrastructure, combined with grid extension and installation of prepaid meters. Given the nature of the intervention, economic benefits will focus on first-time electricity connections resulting from grid extension. In addition, there may be environmental benefits associated with switching from polluting fossil fuels such as kerosene and diesel used by households without grid access to electricity. The Table 4.1 below summarized the characteristics of the project.

Table 4.1: Summary characteristics of the project

Elements	Unit	Value
Investment	[US$ million]	27
Number of new connections	[number]	20,000
Pre-paid meter purchase cost	[US$ million]	81.83
Pre-paid meter rental cost	[[US$ million/month]	1
Connecting household to grid cost	[US$ million]	119.48
Loss reduction on the national power distribution network	%	4

***Source**: Economic and financial analysis model*

II. Determiners of economic and financial viability

4. The supply is expected to improve as a result of the IPP Contour Global extension project and transmission rehabilitation through this project and other partners' projects. The proposed project investments are expected to further improve the quality of service in Lomé. For the purposes of this analysis, the supply is expected to improve in the existing connected areas with the rehabilitation of the existing transmission line

upon completion of the project.

5. To capture the benefits of first-time electricity supply to new households, it is assumed that the consumption of new households will be similar to that of households already connected to the grid. Due to the lack of a detailed household energy survey, there is no information available regarding the spending of unconnected households on alternative sources of energy, such as candles, kerosene, and batteries. The tariff offered by the national utility provide an indication of the willingness to pay.

6. The benefits of improved reliability to existing customers cannot be captured for the project, where at least some information is unavailable on the existing customer base. There is no solid basis on which to estimate how large this reaction might be.

7. While conceptually there could be expected to be environmental benefits of switching from diesel and kerosene used by unconnected households to electricity, in practice this is difficult to capture. The absence of data sources documenting the energy demand patterns of unconnected households and firms makes it difficult to estimate the amount of diesel generation capacity that is likely to be displaced when the grid becomes accessible. Therefore, it is ignored in this study.

8. There are a range of other important benefits that result from increased and improved access to electricity including increased returns on education and wage income; improved access to modern communication and information devices, social benefits to the community (street lighting, increases safety, allowing women to participate in the community life and night); health benefits (reduced burn injuries from kerosene lamps), time savings (e.g. avoiding trips to battery charging). These are all very difficult to quantify and are excluded from the economic analysis, but they nevertheless represent a significant part of the social benefits of rural and peri-urban electrification.

9. Economic costs include the investment and operation and maintenance (O&M) costs for new distribution capital, distribution commercial costs, and the cost of connecting households. It is assumed that the utility bears the financial burden of the connection cost without a connection cost subsidy from the government.

10. In line with the World Bank's new Guidance on Discount Rates for the Economic Analysis of Investment Projects, the discount rate for the economic analysis was determined by examining the medium to long term real per capita GDP growth forecast for Togo and multiplying by two. The World Bank's latest Togo Macroeconomic Brief sees real GDP growth trending towards 6.5 percent over the period to 2018, while the United Nation's long-term population growth forecast for Togo is 3 percent. This gives a real per capita GDP of 3.5 percent and a corresponding discount rate of 7 percent. A summary of the key assumption for the economic analysis is listed in the Table 4.2 below. These are grouped by (i) assumptions relevant to investments in distribution and (ii) assumptions relevant to access expansion. The next section discusses the economic viability of the project.

Table 4.2: Main assumption of the economic analysis

Elements	Units	Value
Distribution		
Technical loss	[%]	11%
Non-technical loss	[%]	13%
Reduction of distribution losses due to the project	[%]	4%

Elements	Units	Value
Consumption growth	[$US]	5%
New connections		
Number	[#]	20,000
Consumption per	[kWh/month]	105
Connection cost	[US$]	119.48
Tariff	[US$/kWh]	0.19
WTP (base case)	[US$/kWh]	0.25

Source: *Economic and financial analysis model*

III. Project Economic Analysis

11. The EIRR is around 22 percent excluding the benefits from improved connections of existing customers. This return rests on critical assumption that increased demand can be met with the extension of Contours Global IPP around 50 MW and the project will help reduce the distribution network losses by 1 percent per year with such assumptions (with a total of 4 percent over the life of the project), the benefits of the project outweigh its costs.

12. The table below provides a deeper look into the results of the economic analysis by breaking down the net present value (NPV) into the cost and benefit components as well as calculating the added benefit of reduced GHG emissions. GHG emissions decline as a result of displaced consumption of diesel fuel. Given that we do not have certainty that these consumers are using diesel generation, it is assumed that there is no displaced generation with diesel. The table 4.3 below shows a breakdown of the NPV.

Table 4.3: Parameters and Results of Economic Analysis

	Elements	Unit	Value
[1]	Discount rate	[%]	7.0%
[2]	**Economic rate of return**		
[3]	ERR	[%]	20.6%
[3]	ERR+local externalities	[%]	20.6%
[4]	ERR+local+GHG@BankGuidanceValues	[%]	22.1%
[5]	**Cost**		
[6]	Existing generation cost	[US$ million]	-183.5
[7]	Distribution capital cost	[US$ million]	-27.0
[8]	Distribution O&M	[US$ million]	-13.0
[9]	Distribution Commercial Costs	[US$ million]	-35.3
[9]	connection costs	[US$ million]	-2.4
[10]	pre-paid meters	[US$ million]	-1.6
[11]	**Total costs**	**[US$ million]**	-262.8
[13]	**Benefits**		
[14]	Consumer benefits, extension	[US$ million]	294.4
[15]	Consumer benefits, densification	[US$ million]	0.0
[16]	Consumer benefits, other consumers	[US$ million]	0.0
[17]	Loss reduction	[US$ million]	139.7
[18]	**Total benefits**	**[US$ million]**	434.1
[19]	**NPV (before environmental benefits)**	**[US$ million]**	171.3

	Elements	Unit	Value
[21]	local environmental benefits: self-generation	[US$ million]	0.0
[22]	local environmental benefits: grid generation	[US$ million]	0.0
[23]	NPV (incl. Local environmental benefits)	[US$ million]	171.3
[24]	GHG emissions damage reduction benefits	[US$ million]	9.7
[25]	**NPV (including environment)**	**[US$ million]**	181.0
[27]	**Lifetime GHG emissions**	**[1000 tons]**	**886**

Source: *Economic and financial analysis model*

IV. Project Financial Analysis

13. The financial analysis presented in this section evaluates the net financial return of the project. The project generates cash inflows by selling, (i) electricity to new connected customers; and (ii) electricity savings from distribution losses. The Total revenue from electricity sale is adjusted with a collection rate of 90 percent and valued at the average retail tariff while cash outflows are represented by the investment costs, energy cost, distribution commercial, operation and maintenance costs.

14. Project Costs. The investment cost of the project is estimated at US$27 million. The operations and maintenance costs are assumed to be two percent (2 percent) of the total investment costs, and distribution commercial costs are assumed to be US$0.03/kWh.

15. Project Benefits. The project benefits are the increase of sales of electricity to new connected and existing customers thanks to the reinforcement of the distribution network, which generate an inflow from the revenue collected through the average low voltage tariff applied.

16. Based on these assumptions, the financial analysis shows that the project is viable, with a financial rate of return from the project of 10.2 percent and a NPV of US$46.4 million assuming a cost of capital of 0.75 percent (IDA terms). Table 4.4 below summarizes the results of the financial analysis

Table 4.4: Project Financial Viability

	Project cost				
	Base	Cost over-run			
	100%	105%	110%	115%	120%
FIRR	10.2%	9.5%	8.3%	6.7%	4.7%
NPV	46.4	44.7	41.2	35.3	26.4
PV(Benefits)	309.1	309.1	309.1	309.1	309.1
PV (Costs)	262.7	264.4	267.9	273.8	282.7
Benefits-Costs-Ratio	1.18	1.17	1.15	1.13	1.09

Source: *Economic and financial analysis model*

V. Sensitivity analysis

17. A sensitivity analysis was performed to assess the project robustness to main risk drivers. The Table 4.5 below shows the switching values that answer the questions as listed below:

Table 4.5: Switching Values

Elements	Unit	Base	Switching Value (Economic)	Switching Value (Financial)
Consumer WTP	[US$/kWh]	0.25	0.151	
Low Voltage Tariff	[US$/kWh]	0.19		0.1251
Investment costs	[US$ million]	27	152	64
Cost of generation	[US$/kWh]	0.12	0.241	0.163
Distribution losses reduction rate	[%]	1	-0.295	0.532

18. For the investment to achieve EIRR equals to the economic cost of capital of 7 percent, the sensitivity analysis provides the following results:

    i. While there is a lot of uncertainty surrounding the real value of willingness to pay, the results suggest that it is reasonable to expect that the willingness to pay could be as low as the switching value of US$0.151/kWh, as this can be a viable value for self-generation cost.
    ii. The analysis also indicates that to retain economic viability, and under the assumption that all excess generation can be sold, CEET could afford to lower the low voltage tariff down to US$0.125/kWh.
    iii. Furthermore, CEET can afford a cost over-run up to US$152 million (463 percent cost increase) in investment cost.
    iv. Similarly, it can afford a cost over-run up to US$64 million (137 percent cost increase) in investment cost to achieve a FIRR equals to the cost of financing the project of 0.75 percent.
    v. The analysis indicates that under the assumption that all excess generation can be sold, the maximum cost of generation can be as high US$0.24/kWh and US$0.163/kWh for economic and financial viability respectively.
    vi. The analysis finally shows that, under the assumption that all excess generation can be sold, the minimum distribution losses reduction rate for economic viability could be as low as negative 0.0295 percent (loss increase). The corresponding minimum rate for financial viability could be 0.532 percent.

VI. CEET Financial position analysis

19. The financial viability of the sector is highly influenced by the financial situation of the CEET as the sole state owned electric utility. A financial analysis of CEET undertaken to assess its financial viability by analyzing the historical performances and the financial projections shows that the financial position of the company is weak and will stay poor.

Historical Operational performance analysis

17. CEET average cost of service which is around 144 FCFA/kWh (0.29 US$/kWh) in the recent years (2015 and 2016) is considered high. The cost of service followed a volatile pattern exemplifies by an increase of 4 percent in 2012 and a decrease of 12 percent in 2014.

18. The energy supply is mainly coming from the neighboring countries through CEB (*Compagnie Electrique du*

Benin); the generation and Transmission Company between Togo and Benin and the single buyer of electricity in the two countries. As the country is facing load shedding, the Government had to use the Contour Global IPP with more costly energy cost depending on fuel prices. Furthermore, the company is facing very excessive technical losses despite operating only on medium and low voltage networks.

19. Selling, General and Administrative expenses (SG&A) followed by the energy supplied by Contour Global IPP, CEB, and fuels are the main cost drivers of the company. The Table 4.6 below shows the impacts of these drivers on the energy supplied cost.

Table 4.6: Drivers of Energy Supplied Cost

Elements (in million F CFA)	Unit	2011	2012	2013	2014	2015
Energy purchased IPP C. G.	million F CFA	15,120	15,804	15,697	15,320	16,805
Energy purchased Imports	million F CFA	45,931	47,886	51,701	54,847	43,198
Fuel	million F CFA	7,382	8,069	18,429	6,542	12,170
SG&A	million F CFA	26,099	33,609	34,854	38,476	55,494
Financial Charges	million F CFA	1,178	1,248	1,416	1,694	2,539
Total cost of service	million F CFA	95,710	106,616	122,097	116,879	130,206
Energy supplied	GWh	686	736	784	852	910
Cost of service	FCFA/kWh	140	145	156	137	143
Cost of service variation	%	N/A	4	8	-12	4
LV Revenues	million F CFA	53,093	59,148	67,728	64,660	68,071
HV Revenues	million F CFA	32,265	36,534	41,244	38,914	41,220
Ratio Revenues LV/HV	%	61	62	61	60	61

Source: CEET financial statements

20. CEET is facing significant losses despite operating only on medium and low voltage networks. The distribution networks are outdated and the level of fraud is high and unsustainable. The company is trying (by investing in rehabilitation and reinforcement programs focus on distribution system, and by introducing secured prepaid meters) to resolve this situation. Nevertheless, more rehabilitation and reinforcement are needed in the distribution system. The Table 4.7 below shows the trend in demand, energy sold and losses.

Table 4.7: Demand, Energy Sold and Losses Trend

Elements	Unit	2011	2012	2013	2014	2015
Demand	GWh	864	920	991	1055	1116
Energy sold	GWh	686	736	783	852	909
Losses	GWh	163	164	183	186	184
Losses[18]	%	24	22	23	22	20

Source: CEET financial statements

21. CEET commercial performance is poor, characterized by a low performance of the employee, inadequate and poor collection rate of states owned enterprises and public administration. CEET commercial performance remains low with a high level of indebtedness. The company is highly leveraged with no internally generated financial resources. In addition, the revenue per kWh collected, estimated to be around 123 FCFA/kWh (0.25

[18] This losses percentage does not include the unpaid bills that is estimated in another 4 percent in 2015. Total losses are estimated at 24 percent.

US$/kWh) in 2011, increased to 138 FCFA/kWh (0.28 US$/kWh) in 2013, and decreased to 118 FCFA/kWh (0.24 US$/kWh) in 2015, is below cost recovery. As result of low level of revenue collected relative to the cost of service, CEET experienced a growing negative margin on the entire period 2011-2015 averaging 16 percent of revenue collected per kWh. The margins are low or negative because of the high cost of service, the level of losses, and a poor commercial performance. The Table 4.8 below shows the evolution of the commercial performance indicators.

Table 4.8: Commercial Performance Indicators

Elements	Unit	2011	2012	2013	2014	2015
Unit revenues collected	FCFA/kWh	123	132	138	113	118
Energy Sold per Employee	kWh/employee	660	769	665	688	765
Energy Sold per Customer	kWh/customer	3	3	3	3	2
Domestic and Industrial consumers	%	90	90	90	90	90
Government bills	%	36	36	36	36	36

Source: CEET financial statements

Historical financial position analysis

22. The financial performance of the company has been poor from 2011 to 2015. The profitability, liquidity, asset efficiency and leverage have been weak, and have kept the company under financial stress, maintaining the company under a sort of financial ”vicious circle”.

Profitability

23. CEET remains in deficit during the period. The operational margin is very low and the operational charges are not covered by revenues. Therefore, the return on equity is low and negative during the last two years. Consequently, the financial performance of the company is weak. The net margin ratio position is negative or low; around 1%. The return on equity is low from 2011 and negative from 2014. Thereafter, the operational cash flow is negative and too low to cover the other cash expenses. The Table 4.9 below shows the evolution of the operational, investments, financing and net cash flow from 2011 to 2015.

Table 4.9: Profitability Ratios

Elements (in million F CFA)	Unit	2011	2012	2013	2014	2015
Operating Margin	%	8	11	6	2	6
Net Margin	%	-4	-8	1	1	-14
Operating Charges Coverage Ratio	%	89	91	90	83	79
Return on Equity (ROE)	%	6	7	3	-15	-4
Return On Capital Employed (ROCE)	%	18	26	16	5	10

Source: CEET financial statements

Liquidity

24. The liquidity of the company has been weak during the period 2011-2015. CEET has not been able to pay its current expenses (Imported energy from CEB, IPP, and fuel) due to its inability to promptly collect its energy billed. The deterioration of its cash conversion cycle (38 days to 73 days) combined with a dramatic change in its cash on hand in 2015 (- 4 days) shows that the company is moving toward a financial distress position. Advent a decision by any supplier to stop the flow of energy and/or fuel to CEET, the company will surely

cease its operation to supply power to the country.

Table 4.10: Liquidity Ratios

Elements (in million F CFA)	Unit	2011	2012	2013	2014	2015
Quick Ratio		1.08	1.22	0.99	0.91	1.11
Current Ratio		1.27	1.29	1.21	1.11	1.20
Collection Days	Days	199	234	223	216	293
Days in Payables	Days	233	234	246	252	215[19]
Cash Conversion Cycle	Days	38	14	23	32	73
Days Cash on Hand	Days	72	14	46	68	-4

Source: CEET financial statements

Solvency

25. CEET is a very indebted company that funds its investment with mainly debts which is currently twice as large as the equity of the company in 2015. Chronic deficit has eroded the equity of the company which has resulted in high interest expenses to service. The utility is trapped in the "vicious circle" characterized by a high indebtedness combined with a chronic deficit, and a tariff which was not able to cover the resulted high costs. The debt ratio increased significantly during the period, while the short term financial position was negative. The credit quality of CEET was weak and was characterized by its inability to honor its debt service obligation, with a negative debt service coverage ratio during the period. Therefore, the financial position of the company, which is in quasi bankruptcy is described in Table 4.11 below.

Table 4.11: Solvency Ratios

Elements	Unit	2011	2012	2013	2014	2015
Leverage (Debt/Equity Ratio)	%	56	61	58	68	118
Indebtedness (Liabilities/Assets)	%	174	180	169	147	149
Interest Coverage Ratio	%	576	862	473	111	276
Debt Service Coverage Ratio (DSCR)	%	-245	-74	-245	-132	-66

Source: CEET financial statements

Asset Efficiency

26. A weak commercial policy has maintained a high level of receivables turnover during the period. It is expected that the introduction of prepaid meters combined with a strong communication and/or marketing plan will improve the receivables turnover. On the other hand, the payables turnover remains relatively the same as the situation did not improve on this front. Table 4.12 below shows the trend in the asset efficiency ratios.

Table 4.12: Asset Efficiency Ratios

Elements	Unit	2011	2012	2013	2014	2015
Receivables turnover	%	670	569	596	615	536
Payables turnover	%	592	531	554	550	520
Working Capital Turnover	%	605	567	735	1261	609
Fixed Asset Turnover	%	221	240	253	204	177

Source: CEET financial statements

[19] This ratio was calculated according to the CEET financial statements 2015, before the Prior Action set by the DPO (Fiscal Management and Infrastructure Reform, P159884), which set a value of 185 for this ratio.

C - Projected Operational performance analysis

27. The financial projections prepared and reviewed by WBG finance team are based on the main assumptions listed below:
    a. financial statements FY2015 and estimated financial statements FY2016, as the final version is not available
    b. Investment plan will be financed under concessional loan
    c. No subsidies are expected from the Government
    d. No Tariff adjustment is entertained in Togo on the projection period
    e. New generation implementation plan follows the placement order: (1) Nangbeto, (2) Import from Nigeria, (3) Contour Global 1, (4) Contour Global 2, (5) Lomé Gas Turbine, (6) Maria Gleta Gas Turbine.

28. CEET's cost of service while already relatively high at 216 FCFA/kWh (0.43 US$/kWh) is projected to increase further beyond 2016 and will follow steadily the same trend from 2017 up to 2019, before decreasing in 2021 to 125 FCFA/kWh (0.25 US$/kWh). The main cost drivers of the company are expected to be fuel energy purchased (import & IPP). The table below shows the evolution of the drivers of the energy supplied cost. The drastic increase in HV revenue starting from 2020 is related to the connection of new industrial customers.

Table 4.13: Projected Drivers of Energy Supplied Costs

Elements	Unit		2017	2018	2019	2020	2021
Energy cost (IPP & Import)	million FCFA	66,644	68,794	72,134	83,314	89,099	95,149
O&M Cost	million FCFA	43,901	47,373	51,435	55,524	59,750	64,170
Fuel Costs	million FCFA	24,281	23,691	4,900	5,000	1,830	4,280
SG&A	million FCFA	29,562	23,831	16,544	28,351	30,498	33,267
Financial Charges	million FCFA	7,533	8,547	9,467	10,330	11,151	11,813
Total cost of service	million FCFA	171,922	172,236	154,479	182,520	192,328	208,679
Energy supplied	GWh	796	852	912	976	1554	1672
Cost of service	FCFA/kWh	216	202	169	187	124	125
Cost of service variation	FCFA/kWh	73	-14	-33	18	-63	1
Growth	%	51	-6	-16	11	-34	1
LV Revenues	million FCFA	75,014	80,932	87,264	101,042	112,812	122,748
HV Revenues	million FCFA	8,561	8,561	8,561	9,209	66,802	72,505
Ratio Revenues HV/LV	%	11	11	10	9	59	59

Source: CEET financial model

29. The losses are high during the three first years, around 20 percent and improve slightly to be close to 16 percent in 2019 and onward. The table 4.14 below shows the trend of the energy losses.

Table 4.14: Projected Energy Losses and Trend

Elements	Unit	2016 (est.)	2017	2018	2019	2020	2021
Demand	GWh	966	1024	1086	1153	1822	1956
Energy sold	GWh	796	852	912	976	1554	1672
Losses	GWh	156	158	161	164	248	264
Losses	%	20	19	18	17	16	16

Source: CEET financial model

Commercial Performance

30. The overall commercial performance of CEET is conservatively expected to stay weak with a forecast low collection rate for the public administration and states owned enterprises[20]. The projections, as conservative assumptions, consider that there will not be improvement on collection rates. Moreover, the metrics related to the energy sold per employee and the energy sold per customer are expected to be stable from 2016 to 2019 with an average of 668 kWh per employee and 2 kWh per customer respectively and expected to increase beyond 2019 due to increase of energy sales thanks to this project. Furthermore, the unit revenue collected per kWh is being around 115 FCFA/kWh (0.23 US$/kWh) in 2016 is forecast to increase up to 124 FCA/kWh (0.25 US$/kWh) on the period 2016-2021. The Table 4.15 below summarizes the commercial performance indicators.

Table 4.15: **Projected Commercial Performance Indicators**

Elements (in million F CFA)	Unit	2016 (est.)	2017	2018	2019	2020	2021
Unit revenues collected	FCFA/kWh	115	115	115	124	123	124
Energy Sold per Employee	kWh/employee	655	667	665	687	1054	1099
Energy Sold per Customer	kWh/customer	2	2	2	2	3	4
Domestic and Industrial consumers[21]	%	90	90	90	90	90	90
Government bills 20	%	36	36	36	36	36	36

Source: CEET financial model

D - Projected financial position analysis

31. The operational performance while improving is not enough to have a material impact on the financial position of the company. Based on the projections, CEET is expected to continue facing poor profitability, liquidity, leverage and asset efficiency.

Profitability

32. The utility is expected not to be able to pay its fixed cost, such as interest on debt, and selling, general and administrative expenses (SG&A). The net margin is forecast to be negative from 2018 onward with average annual deficit FCFA 136 billion. Consequently, CEET profitability is expected to be negative during the period except the last two years when reforms and investment in the sector are expected to be implemented. Therefore, the company will stay in the vicious circle with an inability to cover its expenses. This situation will lead in a deficit of supply with power outages in the long run.

33. The company cost recovery situation is also expected to be very weak. The revenues will be below the operating charges from 2016 to 2019, but will be lightly above from 2020 onward thanks to reforms and

[20] The DPO (Fiscal Management and Infrastructure Reform, P159884) sets a target of 75 percent of collection rate from Government bills for 2019. However, this financial projection, with conservative assumptions, consider that there will not be improvement on collection rates.

[21] The PDO indicators targets for this project target an increase of 4 percent on collection rates for domestic and industrial customers. However, this financial projection, with conservative assumptions, consider that there will not be improvement on collection rates. Moreover, this improvement, as per M&E framework, is not expected to be effective until the end of the project life (2021-2022).

investment in the sector, which are expected to be implemented by then. Similarly, the return on capital employed (investments of CEET) is expected to be negative as the deficit is forecast to be erased only in 2019. Moreover, the utility is expected to be profitable starting from 2020. Table 4.16 below summarizes the profitability ratios.

Table 4.16: Projected Profitability Ratios

Elements (in million F CFA)	Unit	2016 (est.)	2017	2018	2019	2020	2021
Operating Margin	%	-59	-47	-18	-25	16	15
Net Margin	%	7	7	-177	-161	-106	-101
Operating Charges Coverage Ratio	%	56	60	73	70	106	106
Return on Equity (ROE)	%	-272	-71	-29	-28	-11	-12
Return On Capital Employed (ROCE)	%	-118	-85	-34	-65	61	67

Source: CEET financial model

Liquidity

34. CEET short term financial position being weak is expected to see no improvement up to 2019. The company will not be able to timely pay off its current liability. Beyond 2019 the utility will be able to slightly cover its needed expenses. This positive outlook is due to the expected improvement in collection days during these upcoming years. Still, the collection days remains relatively high despite efforts to improve it. As such, CEET cash are mainly locked in the receivables which will not allow the utility to pay timely its suppliers. Furthermore, the company will be mainly relying on its suppliers; this can lead in the end to a supply of energy and fuel cut. Table 4.17 below shows the forecast trend of the liquidity ratios.

Table 4.17: Projected Liquidity Ratios

Elements (in million F CFA)	Unit	2016 (est.)	2017	2018	2019	2020	2021
Quick Ratio	%	91	98	94	105	123	133
Current Ratio	%	101	104	115	110	120	118
Collection Days	Days	216	218	220	212	163	162
Days in Payables	Days	236	236	249	232	240	239
Cash Conversion Cycle	Days	115	111	68	73	163	45
Days Cash on Hand	Days	135	130	96	92	240	121

Source: CEET financial model

Solvency

35. CEET is a highly-leveraged company. The investments are mainly being forecast to be funded using debt. With forecasted poor operating performance, the company is not expected to have positive retained earnings to bolster its equity position which could potentially pave the ways for it to participate in the financing of its investment program. Moreover, the growth in accumulated past and projected deficit will keep eroding the equity of the utility. With expected negative equity, CEET capital structure is and will remain inadequate. Unless a capitalization is pursued, the company will technically be bankrupt. As a matter of fact, the long-term liabilities are forecast to be more than two times the long-term assets. The cash flow is mainly used to repay the debts eroding the company ability to withstand revenue and expense volatility.

36. The company is not able to cover its current expenses until the end of the study period. The cash flow

available to cover the debt service and interest coverage ratio remains negative except at the end of the period (2020-2021) when it is changes to positive values, due to the results in sector reforms and investment implementations. Table 4.18 below shows the expected trend in the solvency ratios.

Table 4.18: Projected Solvency ratios

Elements (in million F CFA)	Unit	2016 (est.)	2017	2018	2019	2020	2021
Leverage (Debt/Equity Ratio)	%	-174	-49	-34	-23	-24	-25
Indebtedness (Liabilities/Assets)	%	33	-71	-147	-274	-282	-282
Interest Coverage Ratio	%	-720	-541	-198	-290	276	260
Debt Service Coverage Ratio (DSCR)	%	-418	-250	-197	-225	23	27

Source: CEET financial model

Asset Efficiency

37. CEET is forecast to maintain during the projection period the speed of supplier's payment despite the critical financial situation. These payments are mainly energy purchased and fuel bills. Consequently, the utility is and will stay in a situation of bankruptcy and the cessation of operations is imminent unless the Government provides adequate subsidy. The extremely high working capital turnover shows that the company have not enough capital to support its sales growth, despite the efficient uses of the assets. Table 4.19 below shows the trend in the assets efficiency ratios.

Table 4.19: Projected Assets Efficiency Ratios

Elements	Unit	2016 (est.)	2017	2018	2019	2020	2021
Receivables turnover	%	169	168	166	272	224	225
Payables turnover	%	154	153	158	156	152	151
Working Capital Turnover	%	10637	2710	842	1196	931	1025
Fixed Asset Turnover	%	169	164	200	266	486	599

Source: CEET financial model

38. The financial analysis of CEET shows that without an improvement of its operational performance (commercial and technical) in sight, CEET will continue to face poor profitability, liquidity issues, high debt leverage and low asset efficiency. Sector and company reforms and the required investments in the system will allow the company to moderately recover from its current dire financial situation. At the end of the period, once the reforms and investments have been implemented, the company may be able to cover its cost related to its financing obligations.